SECTION 10-10

SEATS AND CARPET

CAUTION: This vehicle is equipped with Supplemental Inflatable Restraint (SIR), refer to CAUTIONS in SECTION 9J under "ON-VEHICLE SERVICE" and the SIR Component and Wiring Location view in SECTION 9J before performing service on or around SIR components or wiring. Failure to follow CAUTIONS could result in possible air bag deployment, personal injury or otherwise unneeded SIR system repairs.

NOTICE: If the vehicle has been exposed to extensive water intrusion, such as water leaks, window left open, driving through high water and so forth, the Sensing and Diagnostic Module (SDM) and the SDM connector may need to be replaced. With the ignition "OFF," inspect the area under the front seat and the area around the SDM, including the carpet. If any significant soaking or evidence of significant soaking is detected, the water must be removed, water damage repaired and the SDM and the SDM connector MUST be replaced. Before attempting any of these repairs, the SIR system must be disabled. Refer to SECTION 9J under "ON-VEHICLE SERVICE" for instructions on how to disable the SIR system and replace the SDM and SDM connector.

NOTICE: Always use the correct fastener in the proper location. When you replace a fastener, use ONLY the exact part number for that application. General Motors will call out those fasteners that require a replacement after removal. General Motors will also call out the fasteners that require thread lockers or thread sealant. UNLESS OTHERWISE SPECIFIED, do not use supplemental coatings (paints, greases, or other corrosion inhibitors) on threaded fasteners or fastener joint interfaces. Generally, such coatings adversely affect the fastener torque and joint clamping force, and may damage the fastener. When you install fasteners, use the correct sequence and tightening specifications. Following these instructions can help you avoid damage to parts and systems.

CONTENTS

General Description 10-10-2
- Front Seats 10-10-2
- Rear Seats 10-10-2

On-Vehicle Service 10-10-2
- Front Seats 10-10-2
  - Front Seatback 10-10-2
  - Front Seatback Cover 10-10-5
  - Front Seat Cushion 10-10-6
  - Front Seat Cushion Cover 10-10-6
  - Front Seat Head Restraint—Four - Door Models 10-10-6
  - Front Seat Recliner Mechanism 10-10-6
  - Front Seat Adjuster 10-10-7
- Rear Seat—Two - Door Models 10-10-7
  - Rear Seat Hinges—Two - Door Models 10-10-9
  - Rear Seatback—Two - Door Models 10-10-10
  - Rear Seatback Cover—Two - Door Models 10-10-10
  - Rear Seat Cushion—Two - Door Models 10-10-11
  - Rear Seat Cushion Cover—Two - Door Models 10-10-12
  - Rear Seat Cushion Trim Cover—Two - Door Models 10-10-12
  - Rear Seat Latch—Two - Door Models 10-10-13
  - Rear Seat Latch Striker—Two - Door Models 10-10-13
- Rear Seat—Four - Door Models 10-10-14
  - Rear Seat Hinges—Four - Door Models 10-10-14
  - Rear Seatbacks—Four - Door Models 10-10-14
  - Left Side Rear Seatback Cover—Four - Door Models 10-10-14
  - Right Side Rear Seatback Cover—Four - Door Models 10-10-16
  - Rear Seat Frame Hinges—Four - Door Models 10-10-16
  - Rear Seat Cushion—Four - Door Models 10-10-16
  - Rear Seat Cushion Cover—Four - Door Models 10-10-17
  - Rear Seat Cushion Trim Cover—Four - Door Models 10-10-18
  - Rear Seat Latch Strikers—Four - Door Models 10-10-18
- Floor Carpets 10-10-18
  - Front Floor Carpet 10-10-18
  - Rear Floor Carpet 10-10-18
- Rear Sill Plate 10-10-20
- Floor Pan Insulator Sheets 10-10-20

Specifications 10-10-21
- Fastener Tightening Specifications 10-10-21

GENERAL DESCRIPTION

FRONT SEATS

This vehicle is equipped with high-backed bucket seats (Two - Door models) or low-backed buckets seats with separate head restraints (Four - Door models). Seat cushions and seatbacks have formed foam pads, which fit the contour of the full panel seatback frame assembly and the seat cushion frame. All front bucket seats are equipped with seatback locking mechanisms and manual reclining mechanisms. For access to the rear cargo area, the front seatbacks move forward by use of the recliner lever. The recliner lever is an integral part of the recliner mechanism and is mounted on the outboard side of the seat.

NOTICE: Do not attempt to change the seat position by altering the designed seat adjuster-to-floor pan anchor provisions or seat adjuster-to-seat frame anchor provisions. This adjustment could affect the performance of the seat system.

REAR SEATS

Two - door models are equipped with full-width folding rear seat. The rear seat folds forward to expand the rear cargo area.

Four - door models are equipped with a 60-40 split rear seat. A portion of the rear seat can be folded to gain access to the rear cargo area or the entire rear seat can fold forward to expand the rear cargo area.

NOTICE: Do not attempt to change the seat position by altering the designed seat adjuster-to-floor pan anchor provisions or seat adjuster-to-seat frame anchor provisions. This adjustment could affect the performance of the seat system.

ON-VEHICLE SERVICE

FRONT SEATS

Figures 1, 2 and 3

Remove or Disconnect

1. Two screws and front seat adjuster trim cover (Figure 3).
2. Four front seat anchor bolt covers (Two - Door Models). Five front seat anchor bolt covers (Four - Door Models) (Figures 1 and 2).
3. Four front seat anchor bolts (Two - Door Models), five front seat anchor bolts (Four - Door Models) from front seat and seat from vehicle (Figures 1 and 2).

Install or Connect

1. Front seat to vehicle; secure with four anchor bolts (Two - Door Models), five front seat anchor bolts (Four -Door Models).

Tighten

- Front seat anchor bolts to 25 N.m (19 lb. ft.).

2. Four front seat anchor bolt covers (Two - Door Models). Five front seat anchor bolt covers (Four - Door Models) (Figures 1 and 2).
3. Front seat adjuster trim cover to front seat; secure with two screws (Figure 3).

Front Seatback

Figures 1 through 6

Remove or Disconnect

1. Two screws and front seat adjuster trim cover from front seat (Figure 3).

- Pull front seatback recliner mechanism handle off recliner mechanism.

2. Three screws and front seatback recliner mechanism trim cover (Figure 4).
3. Front seat adjuster actuator cable from recliner mechanism (Figure 5).
4. Two mounting bolts securing the front seatback recliner mechanism to the front seat cushion (Figure 5).
5. One nut and front seatback from front seat cushion (Figure 6).

Install or Connect

1. Front seatback to front seat cushion; secure with one nut (Figure 6).

Tighten

- Front seatback-to-front seat cushion nut to 15 N.m (11 lb. ft.).

2. Front seatback recliner mechanism to front seat cushion; secure with two mounting bolts (Figure 5).

Tighten

- Front seat recliner mechanism-to-front seat cushion mounting bolts to 19 N.m (14 lb. ft.).

3. Front seat adjuster actuator cable to recliner mechanism (Figure 5).
4. Front seatback recliner mechanism trim cover to recliner mechanism; secure with three screws (Figure 4).

- Press front seatback recliner mechanism handle onto recliner mechanism.

5. Front seat adjuster trim cover to front seat; secure with two screws (Figure 3).

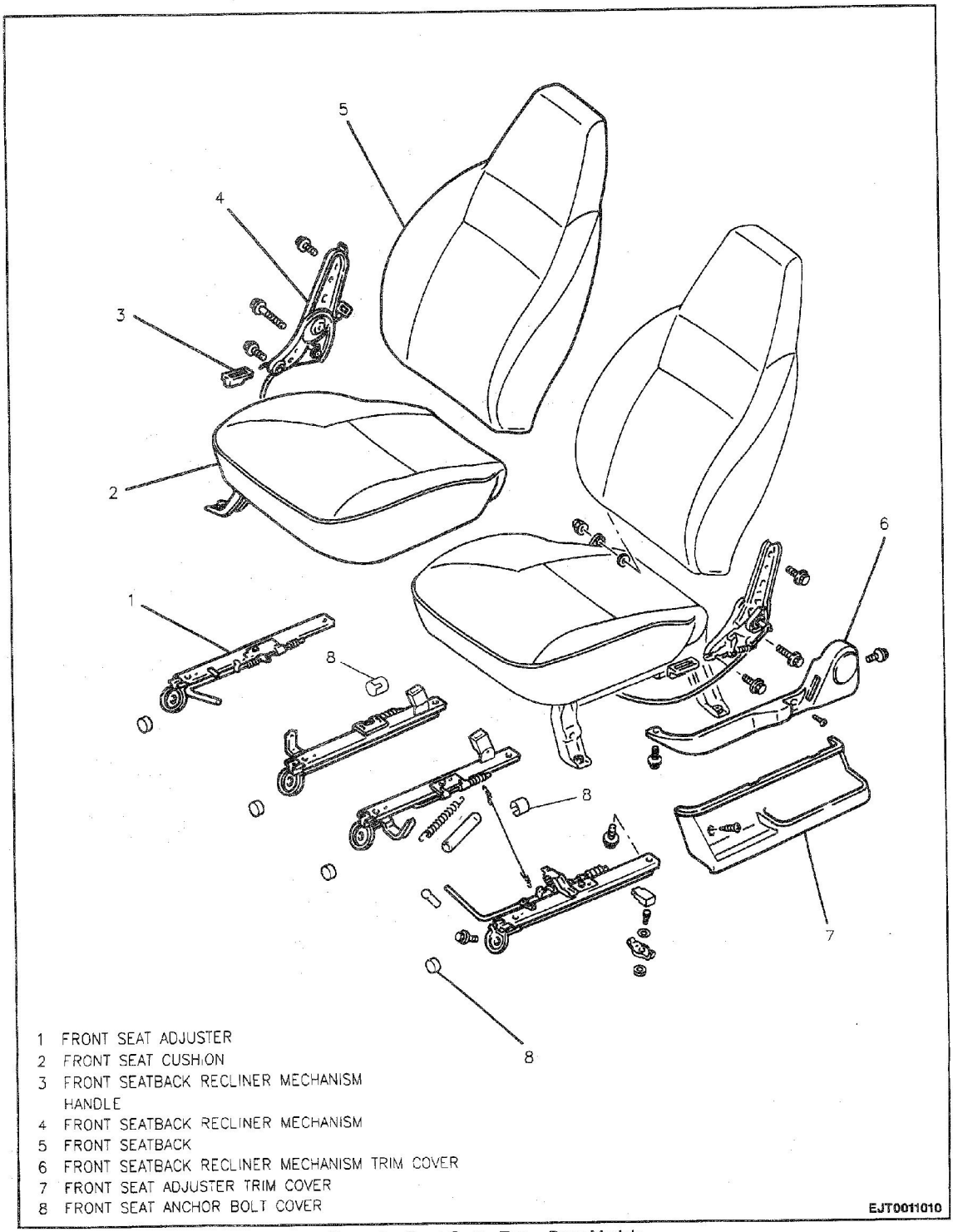

1 FRONT SEAT ADJUSTER
2 FRONT SEAT CUSHION
3 FRONT SEATBACK RECLINER MECHANISM HANDLE
4 FRONT SEATBACK RECLINER MECHANISM
5 FRONT SEATBACK
6 FRONT SEATBACK RECLINER MECHANISM TRIM COVER
7 FRONT SEAT ADJUSTER TRIM COVER
8 FRONT SEAT ANCHOR BOLT COVER

EJT0011010

Figure 1—Front Seat—Two - Door Models

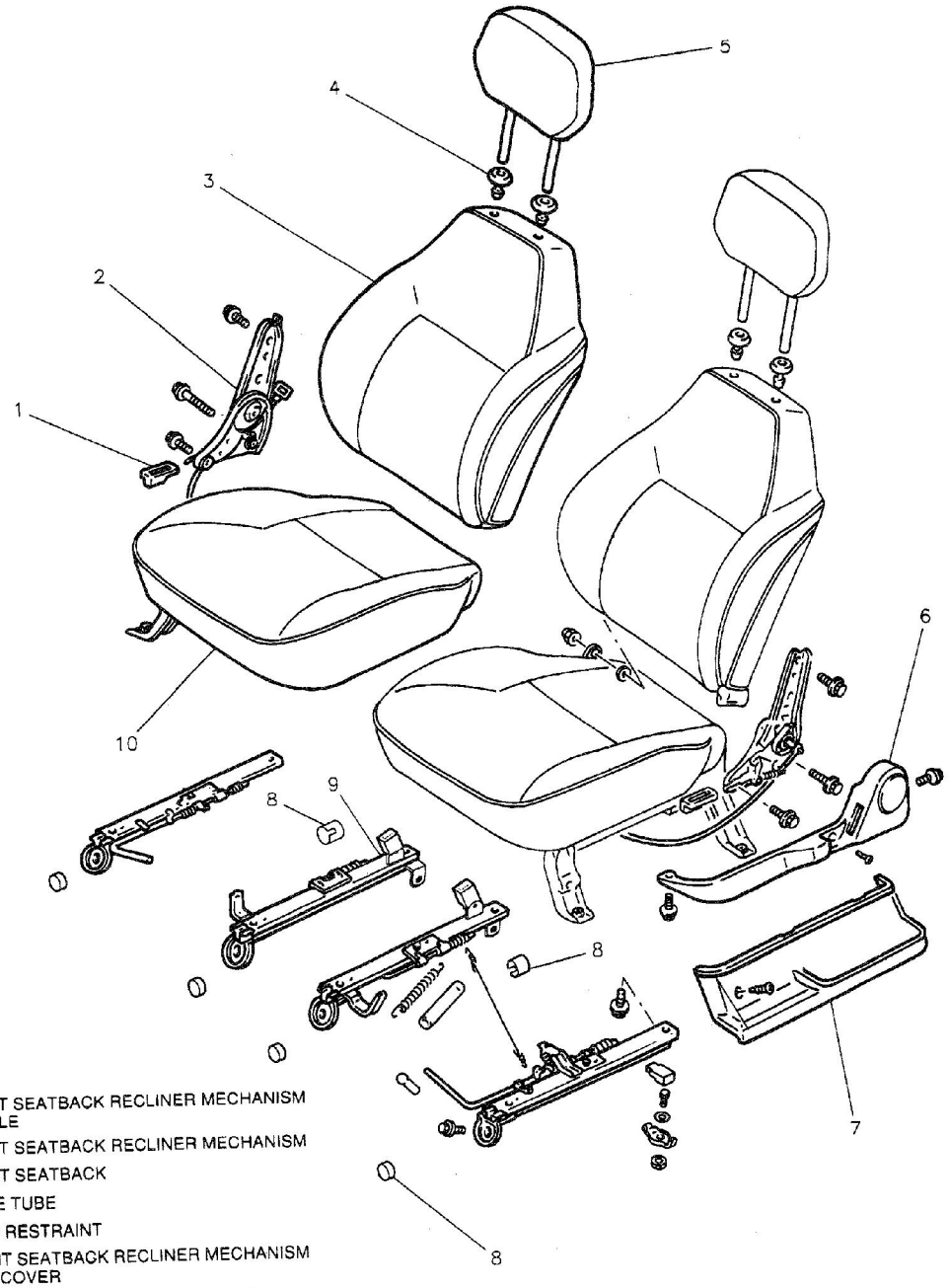

1 FRONT SEATBACK RECLINER MECHANISM HANDLE
2 FRONT SEATBACK RECLINER MECHANISM
3 FRONT SEATBACK
4 GUIDE TUBE
5 HEAD RESTRAINT
6 FRONT SEATBACK RECLINER MECHANISM TRIM COVER
7 FRONT SEAT ADJUSTER TRIM COVER
8 FRONT SEAT ANCHOR BOLT COVER
9 FRONT SEAT ADJUSTER
10 FRONT SEAT CUSHION

EJT0021010

Figure 2—Front Seat—Four - Door Models

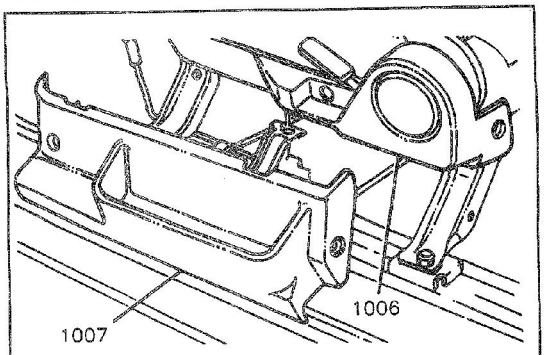

Figure 3—Front Seat Adjuster Trim Cover

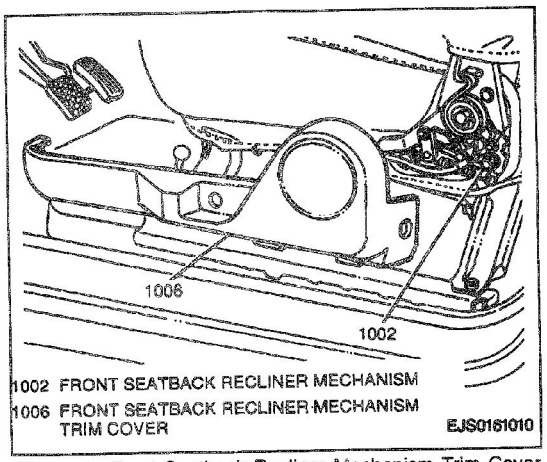

Figure 4—Front Seatback Recliner Mechanism Trim Cover

Front Seatback Cover

Figures 1 through 6

Remove or Disconnect

1. Two screws and front seat adjuster trim cover from front seat (Figure 3).
   - Pull front seatback recliner mechanism handle off recliner mechanism.
2. Three screws and front seatback recliner mechanism trim cover (Figure 4).
3. Front seat adjuster actuator cable from recliner mechanism (Figure 5).
4. Two mounting bolts securing the front seatback recliner mechanism to the front seat cushion (Figure 5).
5. One nut and front seatback from front seat cushion (Figure 6).
   - Push in release clip and pull head restraint up and out of guide tubes (Four - Door Models).

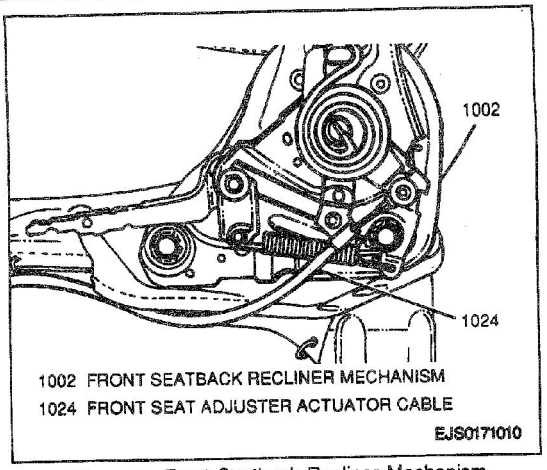

Figure 5—Front Seatback Recliner Mechanism

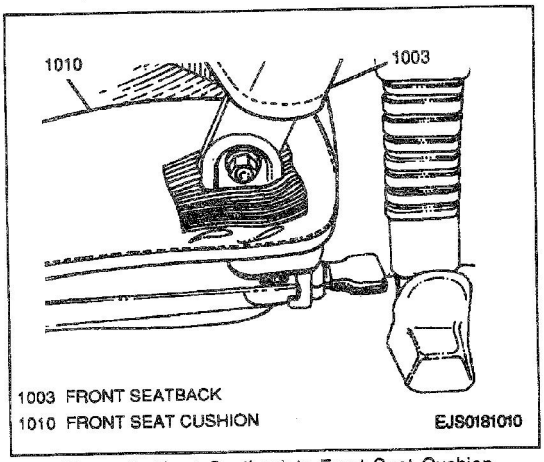

Figure 6—Front Seatback-to-Front Seat Cushion Mounting Nut

- With a flat-bladed tool, gently pry guide tubes from front seatback, disengaging retaining clips (Four -Door Models).
- Cut hog rings securing front seatback cover to seatback frame.
- Roll front seatback cover, slowly and evenly, up from seatback bottom and remove from seatback.

Install or Connect

- Roll front seatback cover down from seatback top; secure cover with hog rings.

1. Guide tubes to front seatback, engaging retaining clips (Four - Door Models).
   - Push in release clip and gently push head restraint into guide tubes (Four - Door Models).
2. Front seatback-to-front seat cushion; secure with one nut (Figure 6).

Tighten

- Front seatback-to-front seat cushion nut to 15 N.m (11 lb. ft.).

3. Front seatback recliner mechanism to front seat cushion; secure with two mounting bolts (Figure 5).

Tighten

- Front seat recliner mechanism-to-front seat cushion mounting bolts to 19 N.m (14 lb. ft.).

4. Front seat adjuster actuator cable to recliner mechanism (Figure 5).
5. Front seatback recliner mechanism trim cover to recliner mechanism; secure with three screws (Figure 4).
   - Press front seatback recliner mechanism handle onto recliner mechanism.
6. Front seat adjuster trim cover to front seat; secure with two screws (Figure 3).

Front Seat Cushion

Figures 1 and 2

Remove or Disconnect

1. Four front seat anchor bolt covers.
2. Four front seat anchor bolts from front seat and seat from vehicle.
3. Front seatback from seat cushion. Refer to "Front Seatback" earlier in this section.
4. Two bolts from each front seat adjuster and adjusters from front seat cushion.

Install or Connect

1. Seat adjusters to front seat cushion; secure each with two bolts.

Tighten

- Front seat adjuster-to-front seat cushion bolts to 25 N.m (19 lb. ft.).

2. Front seatback to seat cushion. Refer to "Front Seatback" earlier in this section.
3. Front seat to vehicle; secure with four bolts.

Tighten

- Front seat anchor bolts to 25 N.m (19 lb. ft.).

4. Four front seat anchor bolt covers.

Front Seat Cushion Cover

Figures 1 and 2

Remove or Disconnect

1. Four front seat anchor bolt covers.
2. Four front seat anchor bolts from front seat and seat from vehicle.
3. Front seatback from seat cushion. Refer to "Front Seatback" earlier in this section.
4. Two bolts from each front seat adjuster and adjusters from front seat cushion.
   - Cut hog rings securing front seat cushion cover to seat.
5. Front seat cushion cover from cushion frame.

Install or Connect

1. Front seat cushion cover to cushion frame; secure with hog rings.
2. Seat adjusters to front seat cushion; secure each with two bolts.

Tighten

- Front seat adjuster-to-front seat cushion bolts to 25 N.m (19 lb. ft.).

3. Front seatback to seat cushion. Refer to "Front Seatback" earlier in this section.
4. Front seat to vehicle; secure with four bolts.

Tighten

- Front seat anchor bolts to 25 N.m (19 lb. ft.).

5. Four front seat anchor bolt covers.

Front Seat Head Restraint—Four - Door Models

Figure 2

Remove or Disconnect

- Push in release clip and pull head restraint up and out of guide tubes.
- With a flat-bladed tool, gently pry guide tubes from front seatback, disengaging retaining clips.

Install or Connect

- Guide tubes to front seatback, engaging retaining clips.
- Push in release clip and gently push head restraint into guide tubes.

Front Seat Recliner Mechanism

Figures 1 through 6

Remove or Disconnect

1. Two screws and front seat adjuster trim cover from front seat assembly (Figure 3).
   - Pull front seatback recliner mechanism handle off recliner mechanism.
2. Three screws and front seatback recliner mechanism trim cover (Figure 4).
3. Front seat adjuster actuator cable from recliner mechanism (Figure 5).
4. Two mounting bolts securing the front seatback recliner mechanism to the front seat cushion (Figure 5).

5. One nut and front seatback from front seat cushion (Figure 6).
   - Push in release clip and pull head restraint up and out of guide tubes (Four - Door Models).
   - With a flat-bladed tool, gently pry guide tubes from front seatback, disengaging retaining clips (Four -Door Models).
   - Cut hog rings securing front seatback cover to seatback frame.
   - Roll front seatback cover up far enough to gain access to the recliner mechanism mounting bolt.
6. One mounting bolt and recliner mechanism from front seatback.

Install or Connect

1. Recliner mechanism to front seatback; secure with one mounting bolt.

Tighten

   - Recliner mechanism-to-front seatback mounting bolt to 15 N.m (11 lb. ft.).
   - Roll front seatback cover down from seatback top; secure cover with hog rings.
2. Guide tubes to front seatback, engaging retaining clips (Four - Door Models).
   - Push in release clip and gently push head restraint into guide tubes (Four - Door Models).
3. Front seatback to front seat cushion; secure with one nut (Figure 6).

Tighten

   - Front seatback-to-front seat cushion nut to 15 N.m (11 lb. ft.).
4. Front seatback recliner mechanism to front seat cushion; secure with two mounting bolts (Figure 5).

Tighten

   - Front seat recliner mechanism-to-front seat cushion mounting bolts to 19 N.m (14 lb. ft.).
5. Front seat adjuster actuator cable to recliner mechanism (Figure 5).
6. Front seatback recliner mechanism trim cover to recliner mechanism; secure with three screws (Figure 4).
   - Press front seatback recliner mechanism handle onto recliner mechanism.
7. Front seat adjuster trim cover to front seat; secure with two screws (Figure 3).

Front Seat Adjuster

Figures 1 through 5

Remove or Disconnect

1. Two screws and front seat adjuster trim cover from front seat assembly (Figure 3).
2. Four front seat anchor bolt covers.
3. Four front seat anchor bolts from front seat and seat from vehicle.
   - Pull front seatback recliner mechanism handle off recliner mechanism.
4. Three screws and front seatback recliner mechanism trim cover (Figure 4).
5. Front seat adjuster actuator cable from recliner mechanism (Figure 5).
6. Front seat adjuster actuator cable from seat adjuster.
7. Two bolts and front seat adjuster from front seat cushion.

Install or Connect

1. Front seat adjuster to front seat cushion; secure with two bolts.

Tighten

   - Front seat adjuster-to-front seat cushion bolts to 25 N.m (19 lb. ft.).
2. Front seat adjuster actuator cable to seat adjuster.
3. Front seat adjuster actuator cable to recliner mechanism (Figure 5).
4. Front seatback recliner mechanism trim cover to recliner mechanism; secure with three screws (Figure 4).
5. Front seatback recliner mechanism handle onto recliner mechanism.
6. Front seat to vehicle; secure with four anchor bolts.

Tighten

   - Front seat anchor bolts to 25 N.m (19 lb. ft.).
7. Four front seat anchor bolt covers.
8. Front seat adjuster trim cover to front seat; secure with two screws (Figure 3).

Rear Seat—Two - Door Models

Figures 7 through 11

Remove or Disconnect

1. Fold rear seatback, pull rear seat release handle and raise rear seat.
2. Unclip rear seat support rod from bottom of seat and support rear seat (Figure 8).
3. Lower rear seat.
4. Gently pry hinge cover from each rear seat hinge (Figure 10).
5. One rear anchor bolt from each rear seat hinge (Figure 9).
6. One front anchor bolt from each rear seat hinge and rear seat from vehicle (Figure 11).

Install or Connect

1. Rear seat to vehicle; secure with one front anchor bolt to each rear seat hinge.

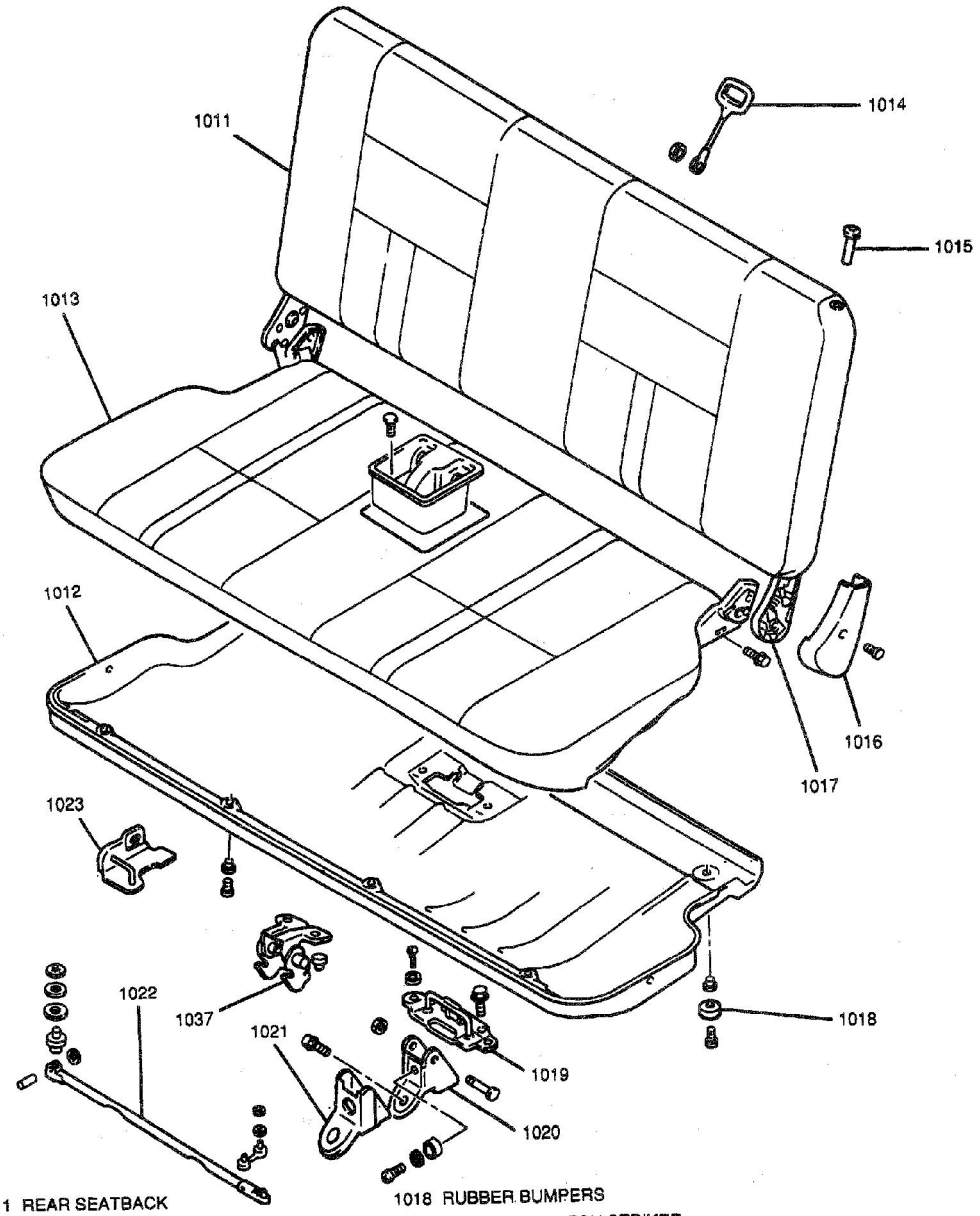

1011 REAR SEATBACK
1012 REAR SEAT CUSHION TRIM COVER
1013 REAR SEAT CUSHION
1014 REAR SEAT RELEASE HANDLE
1015 REAR SEATBACK LOCK KNOB
1016 REAR SEAT FRAME HINGE COVER
1017 REAR SEAT FRAME HINGE
1018 RUBBER BUMPERS
1019 REAR SEAT LATCH STRIKER
1020 REAR SEAT HINGE
1021 REAR SEAT HINGE COVER
1022 REAR SEAT SUPPORT ROD
1023 REAR SEAT SUPPORT ROD STRIKER
1037 REAR SEAT LATCH

EJS0191010

Figure 7—Rear Seat—Two - Door Models

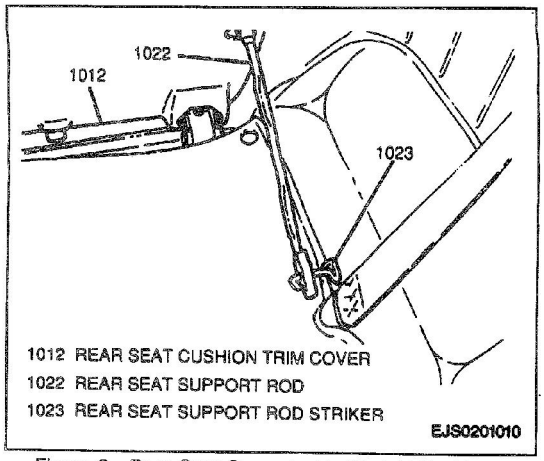

Figure 8—Rear Seat Supported in Upright Position—Two - Door Models

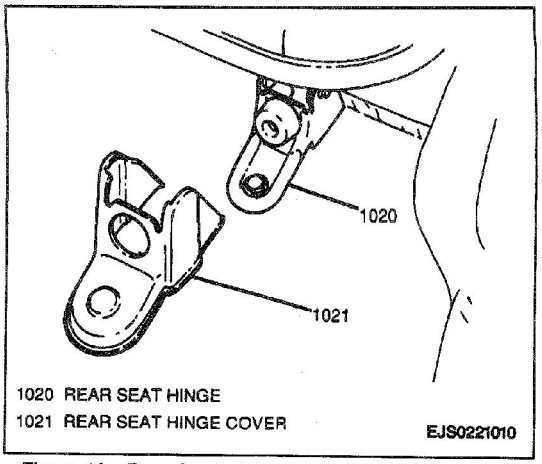

Figure 10—Rear Seat Hinge Cover—Two -Door Models

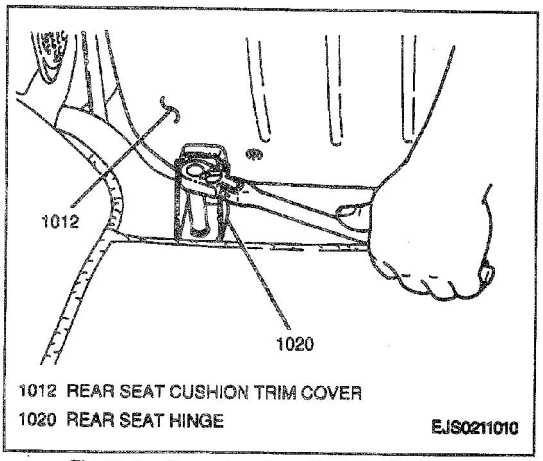

Figure 9—Removing Rear Seat Anchor Bolts

Tighten

- Rear seat front anchor bolts to 25 N.m (19 lb. ft.).

2. Hinge cover to each rear seat hinge (Figure 10).
3. Raise and support with rear seat support rod (Figure 8).
4. One rear anchor bolt to each rear seat hinge.

Tighten

- Rear seat rear anchor bolts to 25 N.m (19 lb. ft.).

5. Clip support rod to bottom of rear seat and lower seat.
6. Raise rear seatback into upright position.

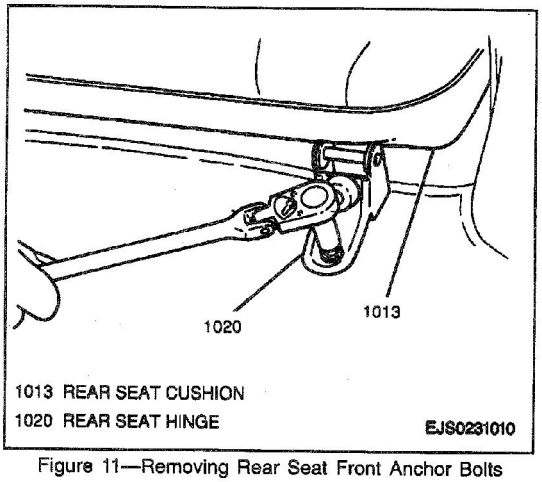

Figure 11—Removing Rear Seat Front Anchor Bolts

Rear Seat Hinges—Two - Door Models

Figure 12

Remove or Disconnect

1. Rear seat. Refer to "Rear Seat Two - Door Models" earlier in this section.
2. One clip and one pin from each rear seat hinge and hinges from seat (Figure 12).

Install or Connect

1. One clip and one pin from each rear seat hinge and hinges from seat (Figure 12).
2. Rear seat. Refer to "Rear Seat Two - Door Models" earlier in this section.

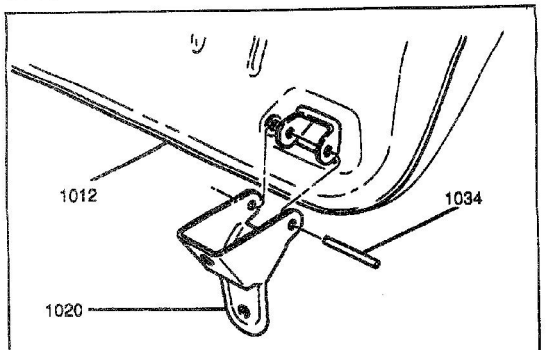

Figure 12—Rear Seat Hinge Removal—Typical

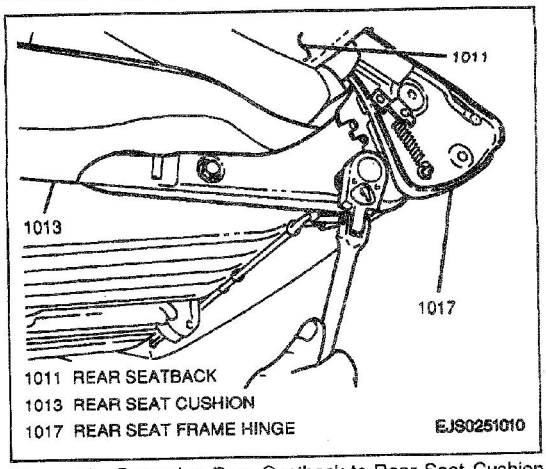

Figure 13—Removing Rear Seatback-to-Rear Seat Cushion Bolts

Rear Seatback—Two - Door Models

Figures 7 through 13

Remove or Disconnect

- Fold rear seatback, pull rear seat release handle and raise rear seat.
- Unclip rear seat support rod from bottom of seat and support rear seat (Figure 8).

1. One rear anchor bolt from each rear seat hinge (Figure 9).
   - Lower rear seat.
   - Gently pry hinge cover from each rear seat hinge (Figure 10).
2. One front anchor bolt from each rear seat hinge and rear seat from vehicle (Figure 11).
3. One clip and one pin from each rear seat hinge and hinges from seat (Figure 12).
4. One clip, one pin and support rod from rear seat.
5. One clip, one pin and rear seat release handle from seat.
6. One screw from each rubber bumper and bumpers from rear seat.
7. Six screws and rear seat cushion trim cover from bottom of rear seat.
8. Two bolts from each side of rear seatback and rear seatback from rear seat cushion (Figure 13).

Install or Connect

1. Rear seatback to rear seat cushion; secure with four bolts, two bolts on each side of rear seatback.

Tighten

- Rear seatback-to-rear seat cushion bolts to 25 N.m (19 lb. ft.).

2. Rear seat cushion trim cover to bottom of rear seat; secure with six screws.
3. Rubber bumpers to rear seat; secure each with one screw.
4. Rear seat release handle; secure with one pin and one clip.
5. Support rod to rear seat; secure with one pin and one clip.
6. Rear seat hinges to seat; secure each with one pin and one clip.
7. Rear seat to vehicle; secure with one front anchor bolt to each rear seat hinge.

Tighten

- Rear seat front anchor bolts to 25 N.m (19 lb. ft.).

8. Hinge cover to each rear seat hinge (Figure 10).
   - Raise and support with rear seat support rod (Figure 8).
9. One rear anchor bolt to each rear seat hinge.

Tighten

- Rear seat rear anchor bolts to 25 N.m (19 lb. ft.).

- Clip support rod to bottom of rear seat and lower seat.
- Raise rear seatback into upright position.

Rear Seatback Cover—Two - Door Models

Figures 7 through 13

Remove or Disconnect

- Fold rear seatback, pull rear seat release handle and raise rear seat.
- Unclip rear seat support rod from bottom of seat and support rear seat (Figure 8).

1. One rear anchor bolt from each rear seat hinge (Figure 9).
   - Lower rear seat.
   - Gently pry hinge cover from each rear seat hinge (Figure 10).

2. One front anchor bolt from each rear seat hinge and rear seat from vehicle (Figure 11).
3. One clip and one pin from each rear seat hinge and hinges from seat (Figure 12).
4. One clip, one pin and support rod from rear seat.
5. One clip, one pin and rear seat release handle from seat.
6. One screw from each rubber bumper and bumpers from rear seat.
7. Six screws and rear seat cushion trim cover from bottom of rear seat.
8. Two bolts from each side of rear seatback and rear seatback from rear seat cushion (Figure 13).
   - Unscrew two rear seatback lock knobs counterclockwise and remove from seat.
   - Unzip rear seatback cover and slide off seatback frame.

Install or Connect

- Slide rear seatback cover over seatback frame and zip cover closed.

1. Two rear seatback lock knobs to seatback, screw on clockwise to secure.
2. Rear seatback to rear seat cushion; secure with four bolts, two bolts on each side of rear seatback.

Tighten

- Rear seatback-to-rear seat cushion bolts to 25 N.m (19 lb. ft.).

3. Rear seat cushion trim cover to bottom of rear seat; secure with six screws.
4. Rubber bumpers to rear seat; secure each with one screw.
5. Rear seat release handle; secure with one pin and one clip.
6. Support rod to rear seat; secure with one pin and one clip.
7. Rear seat hinges to seat; secure each with one pin and clip.
8. Rear seat to vehicle; secure with one front anchor bolt to each rear seat hinge

Tighten

- Rear seat front anchor bolts to 25 N.m (19 lb. ft.).

9. Hinge cover to each rear seat hinge (Figure 10).
   - Raise and support with rear seat support rod (Figure 8).
10. One rear anchor bolt to each rear seat hinge.

Tighten

- Rear seat rear anchor bolts to 25 N.m (19 lb. ft.).
- Clip support rod to bottom of rear seat and lower seat.
- Raise rear seatback into upright position.

Rear Seat Cushion—Two - Door Models

Figures 7 through 13

Remove or Disconnect

- Fold rear seatback, pull rear seat release handle and raise rear seat.
- Unclip rear seat support rod from bottom of seat and support rear seat (Figure 8).

1. One rear anchor bolt from each rear seat hinge (Figure 9).
   - Lower rear seat.
   - Gently pry hinge cover from each rear seat hinge (Figure 10).
2. One front anchor bolt from each rear seat hinge and seat from vehicle (Figure 11).
3. One clip and one pin from each rear seat hinge and hinges from seat (Figure 12).
4. One clip, one pin and support rod from rear seat.
5. One clip, one pin and rear seat release handle from seat.
6. One screw from each rubber bumper and bumpers from seat.
7. Six screws and rear seat cushion trim cover from seat.
8. Two bolts from each side of rear seatback and rear seatback from rear seat cushion (Figure 13).

Install or Connect

1. Rear seatback to rear seat cushion; secure with four bolts, two bolts on each side of rear seatback.

Tighten

- Rear seatback-to-rear seat cushion bolts to 25 N.m (19 lb. ft.).

2. Rear seat cushion trim cover to bottom of rear seat; secure with six screws.
3. Rubber bumpers to rear seat; secure each with one screw.
4. Rear seat release handle; secure with one pin and one clip.
5. Support rod to rear seat; secure with one pin and one clip.
6. Rear seat hinges to seat; secure each with one pin and one clip.
7. Rear seat to vehicle; secure with one front anchor bolt to each rear seat hinge.

Tighten

- Rear seat front anchor bolts to 25 N.m (19 lb. ft.).

8. Hinge cover to each rear seat hinge (Figure 10).
   - Raise and support with rear seat support rod (Figure 8).
9. One rear anchor bolt to each rear seat hinge.

Tighten

- Rear seat rear anchor bolts to 25 N.m (19 lb. ft.).
- Clip support rod to bottom of rear seat and lower seat.
- Raise rear seatback into upright position.

Rear Seat Cushion Cover—Two - Door Models

Figures 7 through 13

Remove or Disconnect

- Fold rear seatback, pull rear seat release handle and raise rear seat.
- Unclip rear seat support rod from bottom of seat and support rear seat (Figure 8).

1. One rear anchor bolt from each rear seat hinge (Figure 9).
   - Lower rear seat.
   - Gently pry hinge cover from each rear seat hinge (Figure 10).
2. One front anchor bolt from each rear seat hinge and seat from vehicle (Figure 11).
3. One clip and one pin from each rear seat hinge and hinges from seat (Figure 12).
4. One clip, one pin and support rod from rear seat.
5. One clip, one pin and rear seat release handle from seat.
6. One screw from each rubber bumper and bumpers from seat.
7. Six screws and rear seat cushion trim cover from seat.
8. Two bolts from each side of rear seatback and rear seatback from rear seat cushion (Figure 13).
   - Cut hog rings and remove rear seat cushion cover from seat cushion.

Install or Connect

1. Rear seat cushion cover to seat cushion; secure with hog rings.
2. Rear seatback to rear seat cushion; secure with four bolts, two bolts on each side of rear seatback.

Tighten

- Rear seatback-to-rear seat cushion bolts to 25 N.m (19 lb. ft.).

3. Rear seat cushion trim cover to bottom of rear seat; secure with six screws.
4. Rubber bumpers to rear seat; secure each with one screw.
5. Rear seat release handle; secure with one pin and one clip.
6. Support rod to rear seat; secure with one pin and one clip.
7. Rear seat hinges to seat; secure each with one pin and one clip.
8. Rear seat to vehicle; secure with one front anchor bolt to each rear seat hinge.

Tighten

- Rear seat front anchor bolts to 25 N.m (19 lb. ft.).

9. Hinge cover to each rear seat hinge (Figure 10).
   - Raise and support with rear seat support rod (Figure 8).
10. One rear anchor bolt to each rear seat hinge.

Tighten

- Rear seat rear anchor bolts to 25 N.m (19 lb. ft.).
- Clip support rod to bottom of rear seat and lower seat.
- Raise rear seatback into upright position.

Rear Seat Cushion Trim Cover—Two - Door Models

Figures 7 through 12

Remove or Disconnect

- Fold rear seatback, pull rear seat release handle and raise rear seat.
- Unclip rear seat support rod from bottom of seat and support rear seat (Figure 8).

1. One rear anchor bolt from each rear seat hinge (Figure 9).
   - Lower rear seat.
   - Gently pry hinge cover from each rear seat hinge (Figure 10).
2. One front anchor bolt from each rear seat hinge and seat from vehicle (Figure 11).
3. One clip and one pin from each rear seat hinge and hinges from seat (Figure 12).
4. One clip, one pin and support rod from rear seat.
5. One clip, one pin and rear seat release handle from seat.
6. One screw from each rubber bumper and bumpers from seat.
7. Six screws and rear seat cushion trim cover from rear seat.

Install or Connect

1. Rear seat cushion trim cover to bottom of rear seat; secure with six screws.
2. Rubber bumpers to rear seat; secure each with one screw.
3. Rear seat release handle; secure with one pin and clip.
4. Support rod to rear seat; secure with one pin and clip.
5. Rear seat hinges to seat; secure each with one pin and clip.
6. Rear seat to vehicle; secure with one front anchor bolt to each rear seat hinge.

Tighten

- Rear seat front anchor bolts to 25 N.m (19 lb. ft.).

7. Hinge cover to each rear seat hinge (Figure 10).
- Raise and support with rear seat support rod (Figure 8).

8. One rear anchor bolt to each rear seat hinge.

Tighten

- Rear seat rear anchor bolts to 25 N.m (19 lb. ft.).

- Clip rear seat support rod to bottom of rear seat and lower seat.
- Raise rear seatback into upright position.

Rear Seat Latch—Two - Door Models

Figures 7 through 12

Remove or Disconnect

- Fold rear seatback, pull rear seat release handle and raise rear seat.
- Unclip rear seat support rod from bottom of seat and support rear seat (Figure 8).

1. One rear anchor bolt from each rear seat hinge (Figure 9).
- Lower rear seat.
- Gently pry hinge cover from each rear seat hinge (Figure 10).

2. One front anchor bolt from each rear seat hinge and seat from vehicle (Figure 11).
3. One clip, one pin from each rear seat hinge and hinges from seat (Figure 12).
4. One clip, one pin and support rod from rear seat.
5. One clip, one pin and rear seat release handle from seat.
6. One screw from each rubber bumper and bumpers from seat.
7. Six screws and rear seat cushion trim cover from bottom of rear seat.
8. One bolt from each rear seat belt buckle and buckles from seat.
9. Two mounting nuts and rear seat latch from bottom of seat cushion.

Install or Connect

1. Rear seat latch to bottom of seat cushion; secure with two mounting bolts.

Tighten

- Rear seat latch mounting bolts to 25 N.m (19 lb. ft.).

2. Rear seat belt buckles to rear seat; secure with two bolts.

Tighten

- Rear seat belt buckle-to-rear seat bolts to 45 N.m (33 lb. ft.).

3. Rear seat cushion trim cover to bottom of rear seat; secure with six screws.
4. Rubber bumpers to rear seat; secure each with one screw.
5. Rear seat release handle; secure with one pin and one clip.
6. Support rod to rear seat; secure with one pin and one clip.
7. Rear seat hinges to seat; secure each with one pin and one clip.
8. Rear seat to vehicle; secure with one front anchor bolt to each rear seat hinge.

Tighten

- Rear seat front anchor bolts to 25 N.m (19 lb. ft.).

9. Hinge cover to each rear seat hinge (Figure 10).
- Raise rear seat and support with rear seat support rod (Figure 8).

10. One rear anchor bolt to each rear seat hinge.

Tighten

- Rear seat rear anchor bolts to 25 N.m (19 lb. ft.).

- Clip support rod to bottom of rear seat and lower seat.
- Raise rear seatback into upright position.

Rear Seat Latch Striker—Two - Door Models

Figures 7, 8 and 14

Remove or Disconnect

- Fold rear seatback, pull rear seat release handle and raise rear seat.
- Unclip rear seat support rod from bottom of seat and support rear seat (Figure 8).

1. Three snap clips at the front of the rear floor carpet.
- Move carpet back to reveal striker mounting bolts.

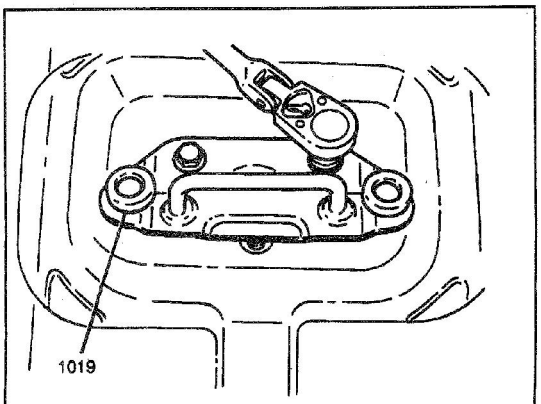

1019 REAR SEAT LATCH STRIKER EJS0261010

Figure 14—Removing Rear Seat Latch Striker

2. Two mounting bolts from rear seat latch striker (Figure 14).
3. Two screws from rear seat latch striker and striker from vehicle (Figure 14).

Install or Connect

1. Rear seat latch striker to vehicle; secure with two screws.
2. Two mounting bolts to rear seat latch striker.

Tighten

- Rear seat latch striker mounting bolts to 25 N.m (19 lb. ft.).
- Reposition carpet; secure with three snap clips.
- Clip support rod to bottom of rear seat and lower seat.
- Raise rear seatback into upright position.

Rear Seat—Four - Door Models

Figure 15

Remove or Disconnect

1. Fold both rear seatbacks.
2. Two rear seat hinge covers.
3. Two anchor bolts from each rear seat hinge (Figure 15).
4. Pull rear seat release handle and remove rear seat from vehicle.

Install or Connect

1. Rear seat to vehicle; secure with two anchor bolts, DO NOT tighten anchor bolts a this time. Tightening anchor bolts at this time will hinder the proper alignment of the rear seat.
2. Lower rear seat ensuring proper alignment with both latch strikers.

Tighten

- Rear seat front anchor bolts to 25 N.m (19 lb. ft.).

3. Two rear seat hinge covers.
4. Raise rear seatback into upright position.

Rear Seat Hinges—Four - Door Models

Figures 12 and 15

Remove or Disconnect

1. Rear seat. Refer to "Rear Seat Four - Door Models" earlier in this section.
2. One clip, one pin and rear seat hinge from rear seat (Figures 12 and 15).

Install or Connect

1. Rear seat hinge on rear seat with one pin and one clip.
2. Rear seat. Refer to "Rear Seat Four - Door Models" earlier in this section.

Rear Seatbacks—Four - Door Models

Figure 15

Remove or Disconnect

1. Fold rear seatback and raise rear seat.
2. One bolt from left side rear seat frame hinge and remove left side rear seatback from rear seat frame hinge and right side rear seatback (Figure 15).
3. One bolt from right side rear seat frame hinge and remove right side rear seatback from rear seat frame hinge post (Figure 15).
4. Rear seatback hinge trim from rear seat frame hinge post.

Install or Connect

1. Rear seatback hinge trim on rear seat frame hinge post.
2. Right rear seatback to rear seat frame hinge with rear seat frame hinge bolt.

Tighten

- Rear seat frame hinge bolt to 25 N.m (19 lb. ft.)

3. Position left rear seatback into right side seat and secure to rear seat frame hinge with rear seat frame hinge bolt.

Tighten

- Rear seat frame hinge bolt to 25 N.m (19 lb. ft.)
- Raise rear seatback into upright position.

Left Side Rear Seatback Cover—Four - Door Models

Figure 15

Remove or Disconnect

1. Rear seatback. Refer to "Rear Seatbacks Four - Door Models" earlier in this section.
2. Unscrew rear seatback lock knob counterclockwise and remove from seatback.
3. Two screws and rear seatback seat belt cover.
4. Squeeze rear seatback hinge sleeve and remove from rear seatback side trim.
5. Rear seatback side trim from rear seatback frame.
6. Cut four hog rings securing rear seatback cover to seat.
7. Rear setback cover from rear seatback frame.

Install or Connect

1. Rear seatback cover to rear seatback frame; secure with four hog rings.
2. One rear seatback lock knob to seatback, screw clockwise to secure.

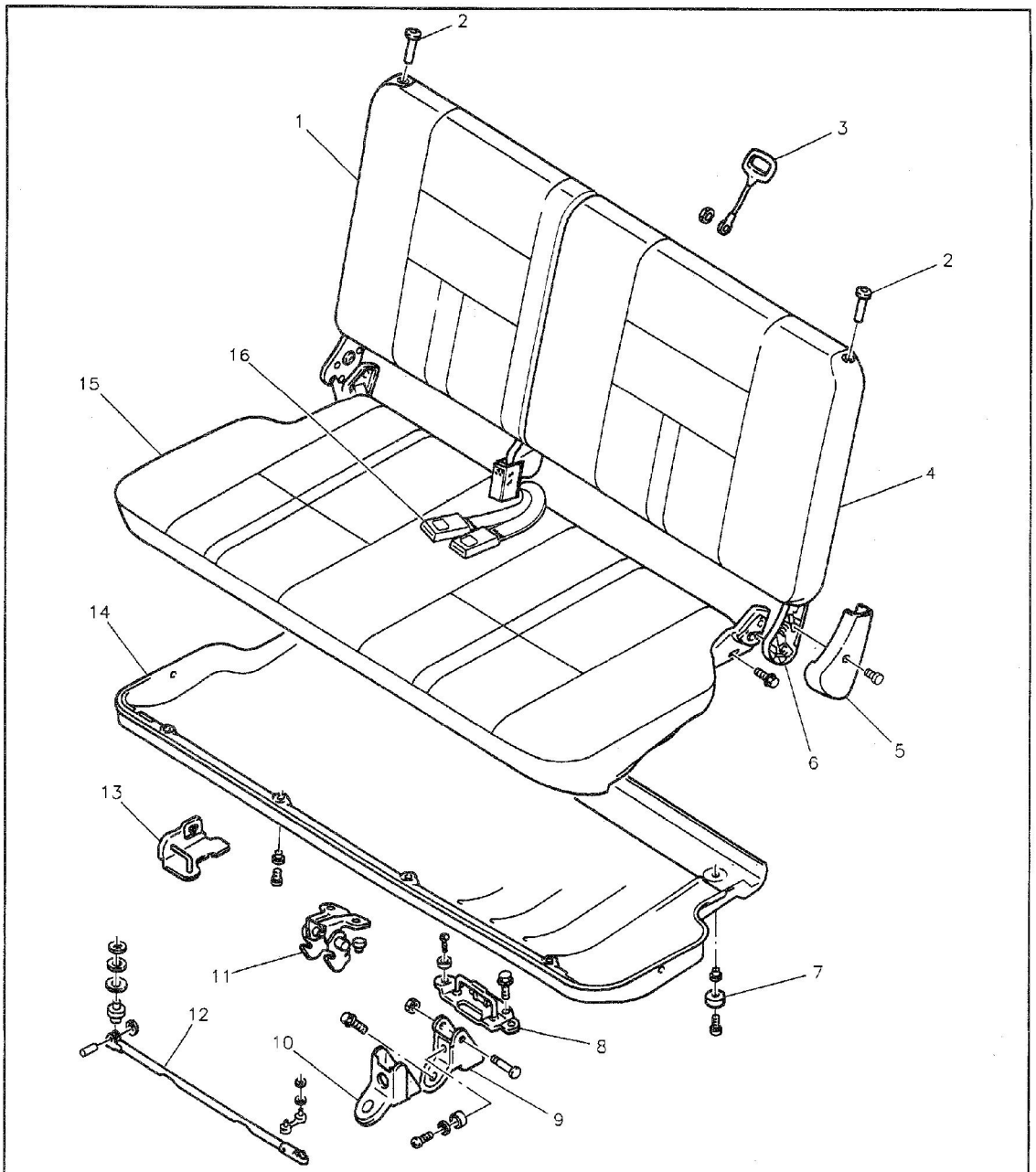

1 REAR SEATBACK (RIGHT SIDE)	8 REAR SEAT LATCH STRIKER	15 REAR SEAT CUSHION
2 REAR SEATBACK LOCK KNOB	9 REAR SEAT HINGE	16 SEAT BEAT BUCKLE
3 REAR SEAT RELEASE HANDLE	10 REAR SEAT HINGE COVER	
4 REAR SEATBACK (LEFT SIDE)	11 REAR SEAT LATCH	
5 REAR SEAT FRAME HINGE COVER	12 REAR SEAT SUPPORT ROD	
6 REAR SEAT FRAME HINGE	13 REAR SEAT SUPPORT ROD STRIKER	
7 RUBBER BUMPERS	14 REAR SEAT CUSHION TRIM COVER	

EJT0031010

Figure 15—Rear Seat—Four - Door Models

3. Rear seatback side trim on rear seatback frame.
4. Rear seatback hinge sleeve in rear seatback side trim.
5. Rear seatback seat belt cover to rear seatback frame with two screws.
6. Rear seatback lock knob clockwise to seatback.
7. Rear seatback. Refer to "Rear Seatbacks Four - Door Models" earlier in this section.

Right Side Rear Seatback Cover—Four - Door Models

Figure 15

Remove or Disconnect

1. Rear seatback. Refer to "Rear Seatbacks Four - Door Models" earlier in this section.
2. Unsnap rear seat securing strap.
3. One screw and rear seat securing strap snap.
4. One screw and rear seat securing strap.
5. Unscrew rear seatback lock knob counterclockwise and remove from seatback.
6. Cut four hog rings securing rear seatback cover to seat.
7. Rear setback cover from rear seatback frame.

Install or Connect

1. Rear seatback cover to rear seatback frame; secure with four hog rings.
2. One rear seatback lock knob to seatback, screw clockwise to secure.
3. One screw and rear seat securing strap.
4. One screw and rear seat securing strap snap.
5. Unsnap rear seat securing strap.
6. Rear seatback. Refer to "Rear Seatbacks Four - Door Models" earlier in this section.

Rear Seat Frame Hinges—Four - Door Models

Figure 15

Remove or Disconnect

1. Respective side rear seatback. Refer to "Rear Seatbacks—Four - Door Models" earlier in this section.
2. Respective side rear seatback cover. Refer to "Right or Left Side Rear Seatback Cover—Four - Door Models" earlier in this section.
3. Two bolts and rear seat frame hinge from rear seatback frame (Figure 15).

Install or Connect

1. Rear seat frame hinge to rear seat frame with two rear seat frame hinge mounting bolts (Figure 15).

Tighten

- Rear seat frame hinge mounting bolts to 20 N.m (15 lb. ft.).

2. Respective side rear seatback cover. Refer to "Right or Left Side Rear Seatback Cover—Four - Door Models" earlier in this section.
3. Respective side rear seatback. Refer to "Rear Seatbacks—Four - Door Models" earlier in this section.

Rear Seat Cushion—Four - Door Models

Figure 15

Remove or Disconnect

1. Both rear seatbacks. Refer to "Rear Seatbacks—Four -Door Models" earlier in this section.
   1. Three snap clips at the front of the rear floor carpet.
- Move carpet to reveal rear seat anchor bolts (Figure 15).
   2. One front anchor bolt from each rear seat hinge.
- Fold rear seatback and raise rear seat.
   3. One rear anchor bolt from each rear seat rail and seat from vehicle.
- Gently pry recliner mechanism lower trim cover loose and remove from seat.
   4. One screw and rear seat outboard rail trim cover from seat.
   5. Rear bolt from recliner mechanism (Figure 15).
   6. Rear seat latch cable from outboard rail (Figure 15).
   7. One screw from each cushion bumper and two cushion bumpers from seat.
   8. One clip, one pin and support rod from rear seat.
   9. Six screws from rear seat cushion trim cover.
- Feed rear seat latch cable through rear seat cushion trim cover and remove cover from seat.
   10. Forward bolt securing rear seat recliner mechanism to seat cushion (Figure 15).
   11. E-ring from rear seat inboard hinge pin and seatback from seat cushion.

Install or Connect

1. Rear seatback to rear seat cushion.
2. E-ring to rear seat inboard hinge pin.
3. Forward bolt securing recliner mechanism to seat cushion (Figure 15).

Tighten

- Rear seat recliner mechanism forward bolt to 20 N.m (15 lb. ft.).

- Feed rear seat latch cable through rear seat cushion trim cover and secure cover to seat with six screws.

4. Rear seat support rod to seat; secure with one pin and one clip.
5. Two cushion bumpers to seat; secure each with one screw.
6. Rear seat latch cable to outboard rail (Figure 15).
7. Rear bolt to recliner mechanism (Figure 15).

Tighten

- Rear seat recliner mechanism rear bolt to 20 N.m (15 lb. ft.).

8. Rear seat outboard latch cover to seat; secure with one screw.
- Press recliner mechanism lower trim cover onto recliner mechanism.

9. Rear seat to vehicle; secure with one front anchor bolt to each rear seat rail.

Tighten

- Rear seat front anchor bolts to 25 N.m (19 lb. ft.).
- Raise and support seat.

10. One rear anchor bolt to each rear seat rail.

Tighten

- Rear seat rear anchor bolts to 25 N.m (19 lb. ft.).
- Clip support rod to bottom of seat and lower seat.
- Raise rear seatback into upright position.
- Reposition carpet; secure with three snap clips.

Rear Seat Cushion Cover—Four - Door Models

Figure 15

Remove or Disconnect

1. Three snap clips at the front of the rear floor carpet.
- Move carpet to reveal rear seat anchor bolts (Figure 15).

2. One front anchor bolt from each rear seat rail.
- Fold rear seatback and raise rear seat.

3. One rear anchor bolt from each rear seat rail and seat from vehicle.
- Gently pry recliner mechanism lower trim cover loose and remove from seat.

4. One screw and rear seat outboard rail trim cover from seat.
5. Rear bolt from recliner mechanism (Figure 15).
6. Rear seat latch cable from outboard rail (Figure 15).
7. One screw from each cushion bumper and two cushion bumpers from seat.
8. One clip, one pin and support rod from rear seat.
9. Six screws from rear seat cushion trim cover.
- Feed rear seat latch cable through rear seat cushion trim cover and remove cover from seat.

10. Forward bolt securing recliner mechanism to seat cushion (Figure 15).
11. E-ring from rear seat inboard hinge pin and seatback from seat cushion.
- Cut hog rings and remove rear seat cushion cover from seat cushion frame.

Install or Connect

1. Rear seat cushion cover to seat cushion frame; secure with hog rings.
2. Rear seatback to rear seat cushion.
3. E-ring to rear seat inboard hinge pin.
4. Forward bolt securing recliner mechanism to seat cushion (Figure 15).

Tighten

- Rear seat recliner mechanism forward bolt to 20 N.m (15 lb. ft.).
- Feed rear seat latch cable through rear seat cushion trim cover and secure cover to seat with six screws.

5. Rear seat support rod to seat; secure with one pin and one clip.
6. Two cushion bumpers to seat; secure each with one screw.
7. Rear seat latch cable to outboard rail (Figure 15).
8. Rear bolt to recliner mechanism (Figure 15).

Tighten

- Rear seat recliner mechanism rear bolt to 20 N.m (15 lb. ft.).

9. Rear seat outboard latch cover to seat; secure with one screw.
- Press recliner mechanism lower trim cover onto recliner mechanism.

10. Rear seat to vehicle; secure with one front anchor bolt to each rear seat rail.

Tighten

- Rear seat front anchor bolts to 25 N.m (19 lb. ft.).
- Raise and support rear seat.

11. One rear anchor bolt to each rear seat rail.

Tighten

- Rear seat rear anchor bolts to 25 N.m (19 lb. ft.).
- Clip support rod to bottom of seat and lower seat.
- Raise rear seatback into upright position.
- Reposition carpet; secure with three snap clips.

Rear Seat Cushion Trim Cover—Four - Door Models

Figure 15

Remove or Disconnect

1. Three snap clips at the front of the rear floor carpet.
   - Move carpet to reveal rear seat anchor bolts (Figure 15).
2. One front anchor bolt from each rear seat rail.
   - Fold rear seatback and raise rear seat.
3. One rear anchor bolt from each rear seat rail and seat from vehicle.
   - Gently pry recliner mechanism lower trim cover loose and remove from seat.
4. One screw and rear seat outboard rail trim cover from seat.
5. Rear bolt from recliner mechanism (Figure 15).
6. Rear seat latch cable from outboard rail (Figure 15).
7. One screw from each cushion bumper and two cushion bumpers from seat.
8. One clip, one pin and support rod from rear seat.
9. Six screws from rear seat cushion trim cover.
   - Feed rear seat latch cable through rear seat cushion trim cover and remove cover from seat.

Install or Connect

- Feed rear seat latch cable through rear seat cushion trim cover and secure cover to seat with six screws.
  1. Rear seat support rod to seat; secure with one pin and one clip.
  2. Two cushion bumpers to seat; secure each with one screw.
  3. Rear seat latch cable to outboard rail (Figure 15).
  4. Rear bolt to recliner mechanism (Figure 15).

Tighten

  - Rear seat recliner mechanism rear bolt to 20 N.m (15 lb. ft.).
  5. Rear seat outboard latch cover to seat; secure with one screw.
- Press recliner mechanism lower trim cover onto recliner mechanism.
  6. Rear seat to vehicle; secure with one front anchor bolt to each rear seat rail.

Tighten

  - Rear seat front anchor bolts to 25 N.m (19 lb. ft.).
- Raise and support rear seat.
  7. One rear anchor bolt to each rear seat rail.

Tighten

  - Rear seat rear anchor bolts to 25 N.m (19 lb. ft.).
- Clip support rod to bottom of seat and lower seat.
- Raise rear seatback into upright position.
- Reposition carpet; secure with three snap clips.

Rear Seat Latch Strikers—Four - Door Models

Figure 8

Remove or Disconnect

1. Fold rear seatback and raise rear seat (Figure 8).
2. Move carpet to reveal latch striker mounting bolts (Figure 8).
3. Two mounting bolts from each latch striker and latch striker from vehicle.

Install or Connect

1. Rear seat latch striker to vehicle; secure with two mounting bolts.

Tighten

   - Rear seat latch striker mounting bolts to 25 N.m (19 lb. ft.).
- Reposition carpet; secure with three snap clips.
- Clip support rod to bottom of seat and lower seat.
- Raise rear seatback into upright position.

FLOOR CARPET

Front Floor Carpet

Figures 16 and 17

Remove or Disconnect

1. Unclip jack handle located under left front seat and remove from vehicle.
2. Unclip wheel nut wrench located under right front seat and remove from vehicle.
3. Unclip jack located under right front seat and remove from vehicle.
4. Front seats. Refer to "Front Seat Two - Door Models or Front Seats Four - Door Models" earlier in this section.
5. Rear seat. Refer to "Rear Seat Two - Door Models or Rear Seat Four - Door Models" earlier in this section.
6. Two screws, two plastic retaining clips and console box from vehicle (Figure 17).
7. Four screws and parking brake lever trim bezel/cup holder from vehicle.
8. Lift plastic covers to gain access to each front seat belt buckle anchor bolt (Two - Door Models).
9. One anchor bolt from each front seat belt buckle and remove buckles from vehicle.

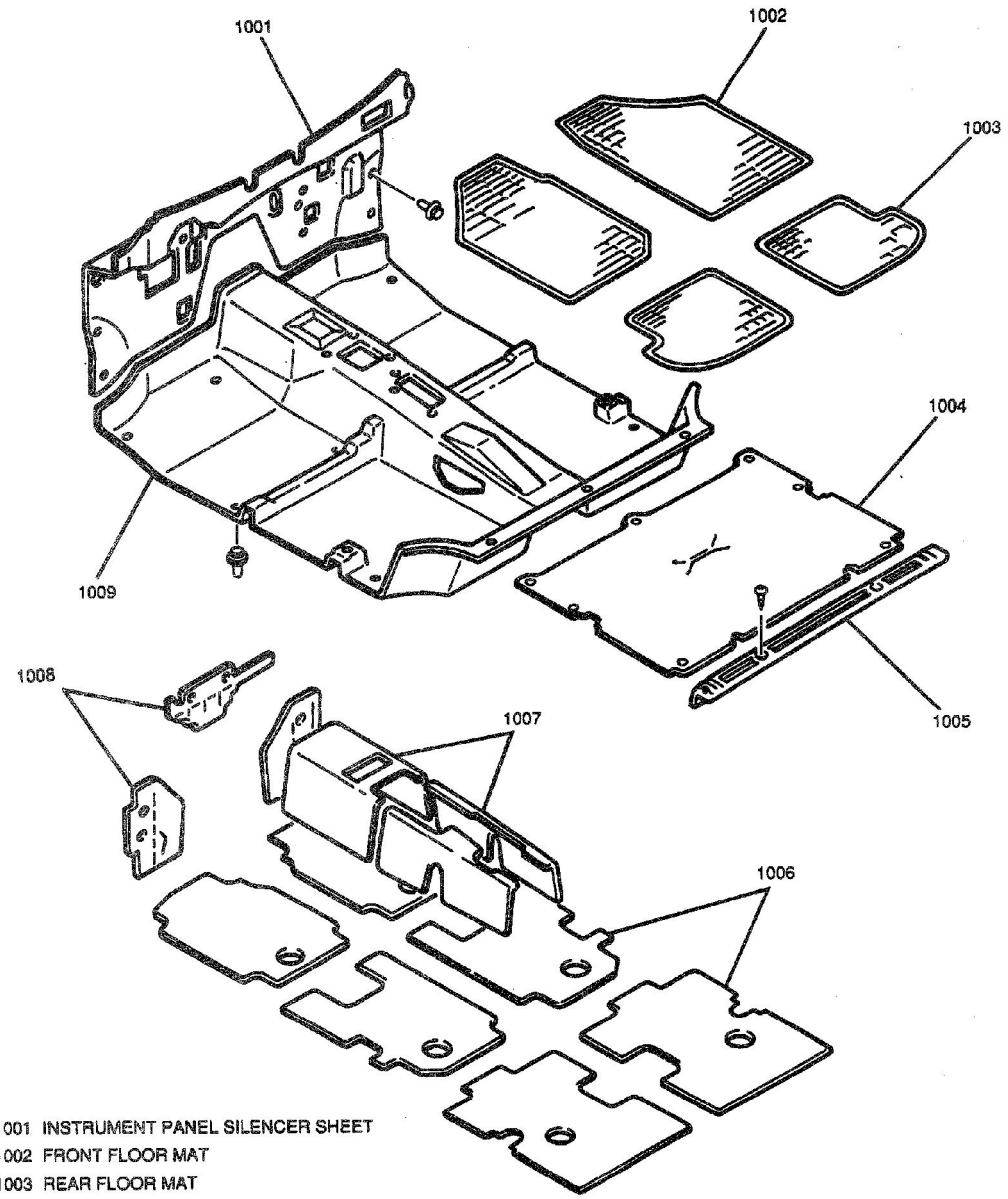

1001 INSTRUMENT PANEL SILENCER SHEET
1002 FRONT FLOOR MAT
1003 REAR FLOOR MAT
1004 REAR FLOOR CARPET
1005 REAR SILL PLATE
1006 FLOOR PAN INSULATORS
1007 FLOOR TUNNEL INSULATORS
1008 INSTRUMENT PANEL INSULATOR
1009 FRONT FLOOR CARPET

EJS001103

Figure 16—Floor Carpet Two Door Model Shown, Four Door Model Similar

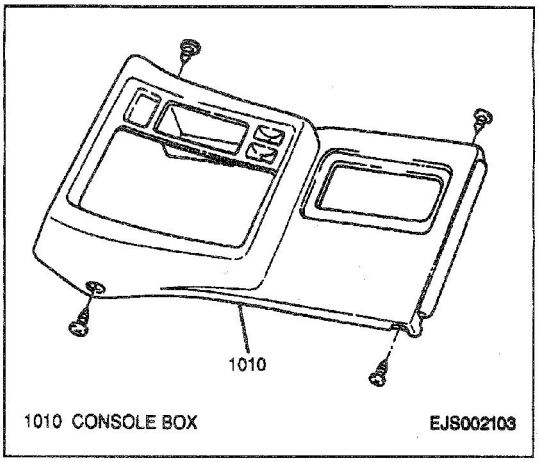

Figure 17—Console Box—Typical

10. Electrical connector from left front seat belt buckle.
11. Four plastic retainers attaching carpet to the bulkhead.
12. Three plastic clips from rear of carpet and carpet from vehicle.

Install or Connect

1. Carpet into vehicle.
2. Three plastic clips to rear of carpet.
3. Left front seat belt buckle electrical connector.
4. Front seat belt buckles to vehicle; secure each with one anchor bolt (Two - Door Models).

Tighten

- Front seat belt buckle anchor bolts to 45 N·m (33 lb. ft.).

5. Lower plastic covers onto front seat belt buckle anchor bolts.
6. Parking brake lever trim bezel/cup holder to vehicle; secure with four screws.
7. Console box to vehicle; secure with two screws and two plastic retaining clips (Figure 17).
8. Front seats. Refer to "Front Seat Two - Door Models or Front Seats Four - Door Models" earlier in this section.
9. Rear seat. Refer to "Rear Seat Two - Door Models or Rear Seat Four - Door Models" earlier in this section.
10. Front and rear seats. Refer to "Front Seat Replacement" and "Rear Seat Replacement" earlier in this section.
11. Jack to vehicle, clip into place under right front seat.
12. Wheel nut wrench to vehicle, clip into place under right front seat.
13. Jack handle to vehicle, clip into place under left front seat.

Rear Floor Carpet

Figure 16

Remove or Disconnect

- Pull rear seat lock handle and raise rear seat cushion.

1. Three plastic clips from front of rear floor carpet.
2. Four screws and rear sill plate from vehicle (Figure 16).
3. Rear floor carpet from vehicle.

Install or Connect

1. Rear floor carpet to vehicle.
2. Rear sill plate to vehicle; secure with four screws (Figure 16).
3. Three plastic retaining clips to front of rear floor carpet.

- Lower rear seat cushion.

REAR SILL PLATE

Figure 16

Remove or Disconnect

- Four screws and rear sill plate from vehicle.

Install or Connect

- Rear sill plate to vehicle; secure with four screws.

FLOOR PAN INSULATOR SHEETS

Figure 16

Floor pan insulators have been designed for higher floor pan temperatures that result from the use of the catalytic converter in the exhaust system. Floor pan insulators also act as silencers and help reduce the exterior noise level within the passenger compartment. Therefore, when servicing a vehicle in the field, it is essential that any insulator that may have been disturbed or removed be reinstalled in the original sequence and location. Also, if it becomes necessary to replace an insulator, the material specified for that particular location on the floor pan must be used. Use the following steps when installing:

CAUTION: All replacement insulator materials must meet Motor Vehicle Safety Standard No. 302 for flammability, or vehicle damage and personal injury could result.

- Insulators must be installed in their original positions and sequence. The sheets should be butted together in order to avoid gapping or overlapping.
- When installing a floor pan insulator, do not enlarge cutouts or holes that are used for the attachment of interior components such as seats or seat belts.

- Cross-body harnesses for interior components such as the seat belt indicator and alarm or rear speakers must be routed over the floor pan insulator in their original position and clipped into place.
- Spray-on deadeners and trim adhesives should not be applied to the top of the floor pan at the area directly over the catalytic converter or muffler.

SPECIFICATIONS

FASTENER TIGHTENING SPECIFICATIONS

Front Seat Anchor Bolts	25 N.m (19 lb. ft.)
Front Seatback-to-Front Seat Cushion Nut	15 N.m (11 lb. ft.)
Front Seat Recliner Mechanism-to-Front Seat Cushion Mounting Bolts	19 N.m (14 lb. ft.)
Front Seat Adjuster-to-Front Seat Cushion Bolts	25 N.m (19 lb. ft.)
Front Seat Belt Buckle Anchor Bolt	45 N.m (33 lb. ft.)
Recliner Mechanism-to-Front Seatback Mounting Bolt	15 N.m (11 lb. ft.)
Rear Seat Belt Buckle-to-Rear Seat Belt Bolts	45 N.m (33 lb. ft.)
Rear Seat Front Anchor Bolts	25 N.m (19 lb. ft.)
Rear Seat Rear Anchor Bolts	25 N.m (19 lb. ft.)
Rear Seatback-to-Rear Seat Cushion Bolts	25 N.m (19 lb. ft.)
Rear Seat Frame Hinge Bolts	20 N.m (15 lb. ft.)
Rear Seat Latch Mounting Bolts	25 N.m (19 lb. ft.)
Rear Seat Latch Striker Mounting Bolts	25 N.m (19 lb. ft.)

BLANK