SECTION 5D1

VACUUM BOOSTER SYSTEM

NOTICE: Always use the correct fastener in the proper location. When you replace a fastener, use ONLY the exact part number for that application. General Motors will call out those fasteners that require a replacement after removal. General Motors will also call out the fasteners that require thread lockers or thread sealant. UNLESS OTHERWISE SPECIFIED, do not use supplemental coatings (paints, greases, or other corrosion inhibitors) on threaded fasteners or fastener joint interfaces. Generally, such coatings adversely affect the fastener torque and joint clamping force, and may damage the fastener. When you install fasteners, use the correct sequence and tightening specifications. Following these instructions can help you avoid damage to parts and systems.

NOTICE: Avoid spilling brake fluid on any of the vehicle's painted surfaces, wiring cables or electrical connectors. Brake fluid will damage paint and electrical connections. If any fluid is spilled on the vehicle, flush area with water to lessen damage.

CONTENTS

GENERAL DESCRIPTION

BRAKE BOOSTER ASSEMBLY

The booster assembly is located between the master cylinder and the brake pedal. It is designed so the force created when the brake pedal is depressed mechanically increases with the engine vacuum. When the brake pedal is depressed the force is transmitted to the piston of the master cylinder through the valve operating rod, booster air valve, reaction disc and piston rod. The force of the booster piston is developed due to the pressure difference between the front and the rear chambers.

Important

- Replace all components included in repair kits used to service this brake system.
- Lubricate parts as specified.
- If any hydraulic components are removed or disconnected, it may be necessary to bleed all or part of the brake system. Refer to SECTION 5 for brake system bleeding procedures.
- Replace brake shoes and brake pads in axle sets only.
- The torque values specified are for dry, unlubricated fasteners.
- Perform service operations on a clean bench, free from mineral oil materials.

ON-VEHICLE SERVICE

BRAKE BOOSTER ASSEMBLY

Figures 1 and 2

Remove or Disconnect

1. Negative (-) battery cable.
2. Master cylinder. Refer to SECTION 5A.
3. Loosen clamp on brake booster vacuum hose clamp and remove hose from brake booster (Figure 1).
4. Cotter pin and clevis pin from master cylinder operating rod clevis and remove clevis from brake pedal (Figure 2).
5. Four mounting nuts and brake booster from bulkhead.

Install or Connect

1. Brake booster to bulkhead; secure with four mounting nuts.

   Tighten

   - Brake booster mounting nuts to 13 N·m (115 lbs. in.).
2. Master cylinder operating rod clevis to brake pedal; secure with clevis pin and cotter pin.

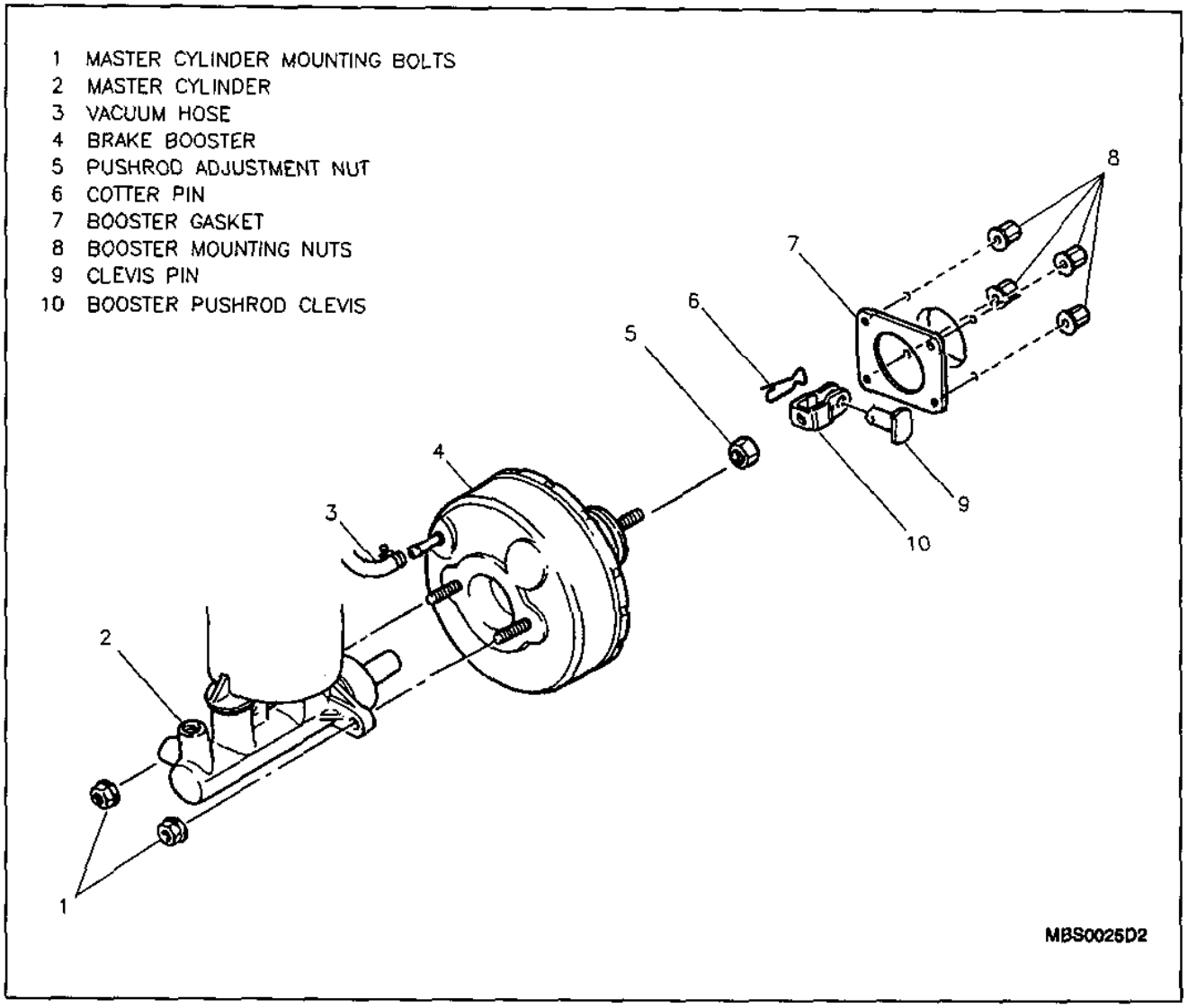

Figure 1—Master Cylinder and Brake Booster Assemblies

3. Brake booster vacuum hose to brake booster; secure with vacuum hose clamp.
4. Master cylinder. Refer to SECTION 5A.
5. Negative (-) battery cable.

Tighten

- Negative (-) battery cable-to-negative (-) battery terminal retainer to 15 N.m (11 lbs. ft.).

CHECK VALVE HOSE

Figure 1

The check valve is located in the brake booster vacuum hose that is connected directly to the brake booster.

Remove or Disconnect

1. Loosen brake booster vacuum hose clamp at the brake booster and remove hose from brake booster (Figure 1).
2. Loosen brake booster vacuum hose clamp at the brake booster vacuum pipe located on the bulkhead and remove hose from vehicle.

Install or Connect

1. Brake booster vacuum hose to the brake booster pipe on the bulkhead; secure with hose clamp.
2. Brake booster vacuum hose to the brake booster; secure with hose clamp.

BRAKE BOOSTER ADJUSTMENT

Figures 3 through 6

Tools Required:
J 39567 Booster Push Rod Gage
J 37767 Booster Push Rod Wrench

Important

- The clearance between the master cylinder primary piston and the brake booster piston rod adjusting nut should be 0.0 mm (0.0 in.) (Figure 3).

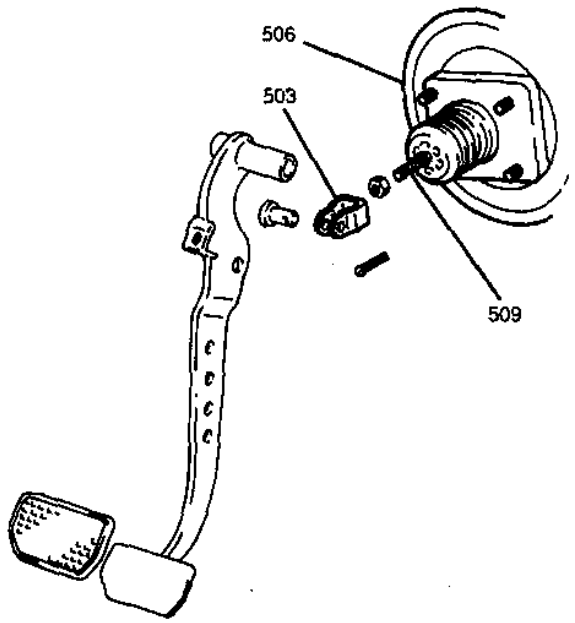

503 MASTER CYLINDER OPERATING ROD CLEVIS
506 BRAKE BOOSTER
509 MASTER CYLINDER OPERATING ROD
EJS0025D1

Figure 2—Brake Pedal-to-Master Cylinder Operating Rod Clevis

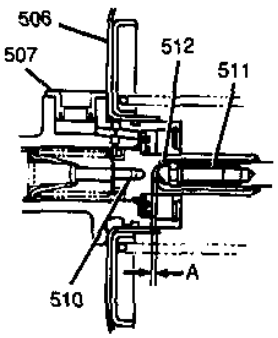

A MASTER CYLINDER PRIMARY PISTON-TO-BRAKE BOOSTER PISTON ROD ADJUSTING NUT = 0.0 mm (0.0")
506 BRAKE BOOSTER
507 MASTER CYLINDER
510 MASTER CYLINDER PRIMARY PISTON
511 BRAKE BOOSTER PISTON ROD
512 BRAKE BOOSTER PISTON ROD ADJUSTING NUT
EJS0035D1

Figure 3—Master Cylinder Primary Piston-to-Brake Booster Piston Rod Adjusting Nut

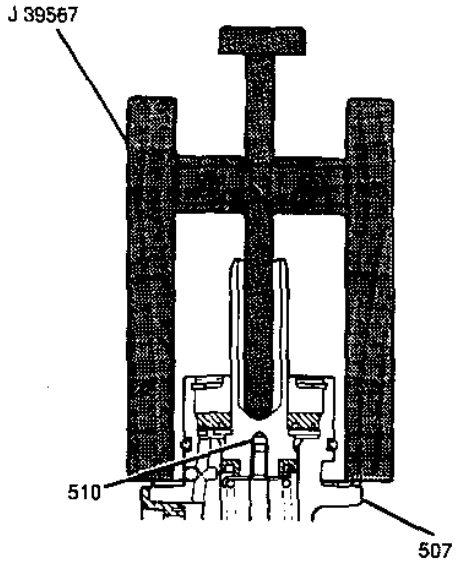

507 MASTER CYLINDER
510 MASTER CYLINDER PRIMARY PISTON
EJS0045D1

Figure 4—Installing J 39567 Onto Master Cylinder

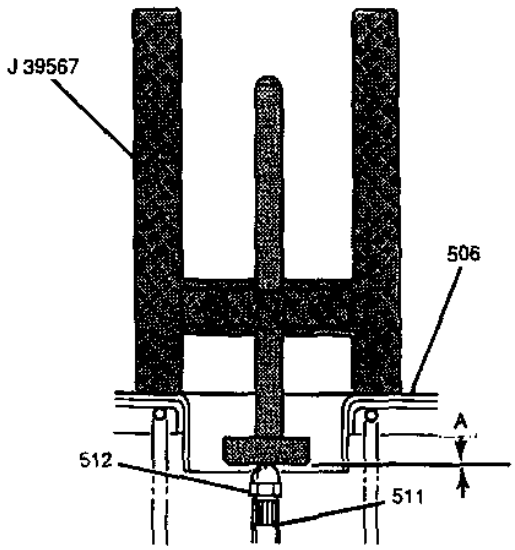

A CLEARANCE BETWEEN J 39567 AND BRAKE BOOSTER PISTON ROD = 0.0 mm (0.0")
506 BRAKE BOOSTER
511 BRAKE BOOSTER PISTON ROD
512 BRAKE BOOSTER PISTON ROD ADJUSTING NUT
EJS0055D1

Figure 5—Installing J 39567 Onto Brake Booster

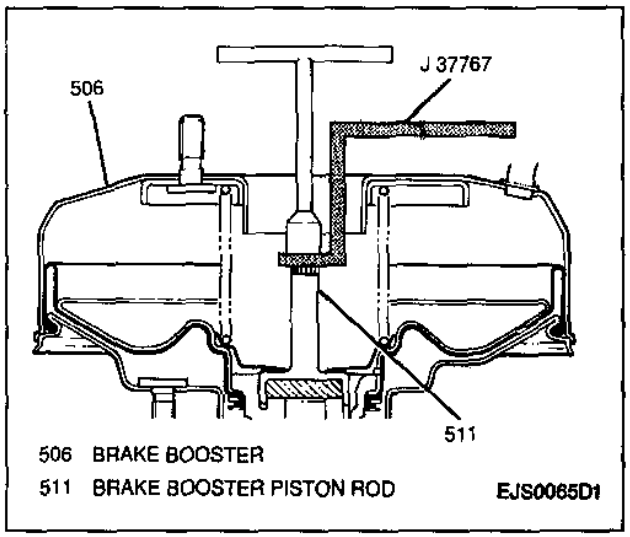

Figure 6—Installing J 37767 Onto Brake Booster Piston Rod

1. Set a J 39567 on the master cylinder. Push the J 39567 pin down until it touches the master cylinder primary piston (Figure 4).
2. Remove the J 39567 from the master cylinder, do not alter the position of the pin.
3. Turn the J 39567 upside down and set it on the brake booster (Figure 5).

Measure

- The clearance between the brake booster piston rod and the J 39567 (Figure 4). If the clearance is not 0.0 mm (0.0 in.), adjust the brake booster piston rod length.

Adjust

- Brake booster piston rod length. Hold brake booster piston rod in place with the J 37767 (Figure 6). Turn the 7 mm brake booster piston rod adjusting nut until it touches the J 39567 pin head.

UNIT REPAIR

BRAKE BOOSTER

Figures 7 through 21

Remove or Disconnect

Tools Required:
- J 23456 Power Brake Booster Disassembly and Reassembly Fixture
- J 23456-51A Fixture Adapter
- J 34874 Booster Seal Remover/Installer
- J 7079-2 Non-Threaded Universal Driver Handle
- J 35379 Front Knuckle Support

1. Master cylinder operating rod clevis from master cylinder operating rod by turning counterclockwise.
2. Master cylinder operating rod clevis locknut.
3. Mount brake booster into a vise-mounted J 23456 along with a J 23456-51A. Tighten fixture center screw enough to secure booster but not enough to inhibit rotation of the booster (Figure 8).
4. Scribe an alignment mark on brake booster front and rear body halves to facilitate reassembly.
5. Separate brake booster front and rear body halves.
   A. Using the J 23456 for leverage, rotate the front half of the booster (Figure 9) until all indexing tabs are aligned with indentations on the rear half of the booster (Figure 10).
   B. Slowly loosen the J 23456 center screw and separate the booster halves.
   C. Remove the two booster halves from the J 23456 and J 23456-51A.
6. Brake booster piston return spring from brake booster front body.
7. Rear body boot from rear body.
8. Filter element and filter separator from rear body.
9. Brake booster piston from brake booster rear body.
10. Brake booster rear body oil seal from rear body using a J 7079-2, a J 35379 and a J 34874. Drive seal out with a hammer (Figure 11).
11. Valve stopper key cushions from valve stopper key (Figure 12).
12. Valve stopper key from brake booster piston while working air valve assembly in an in-and-out motion (Figure 13).
13. Brake booster air valve from brake booster piston (Figure 14).

Important

- Brake booster air valve cannot be disassembled.

14. Diaphragm stopper ring and retainer from brake booster piston (Figure 15).

NOTICE: Do not use a screwdriver or any other tool to remove the diaphragm. Pull it off by hand, carefully removing diaphragm from piston.

15. Diaphragm from brake booster piston (Figure 16).
16. Brake booster piston rod retainer.
17. Brake booster piston rod from piston.
18. Reaction disc from piston rod.

Inspect

- Brake booster piston for corrosion and/or excessive wear. Replace as necessary.
- Diaphragm for tears, wear, and/or distortion. Replace as necessary.
- Brake booster air valve for cracks or excessive wear. Replace as necessary.
- Master cylinder operating rod for excessive wear or damage. Replace as necessary.

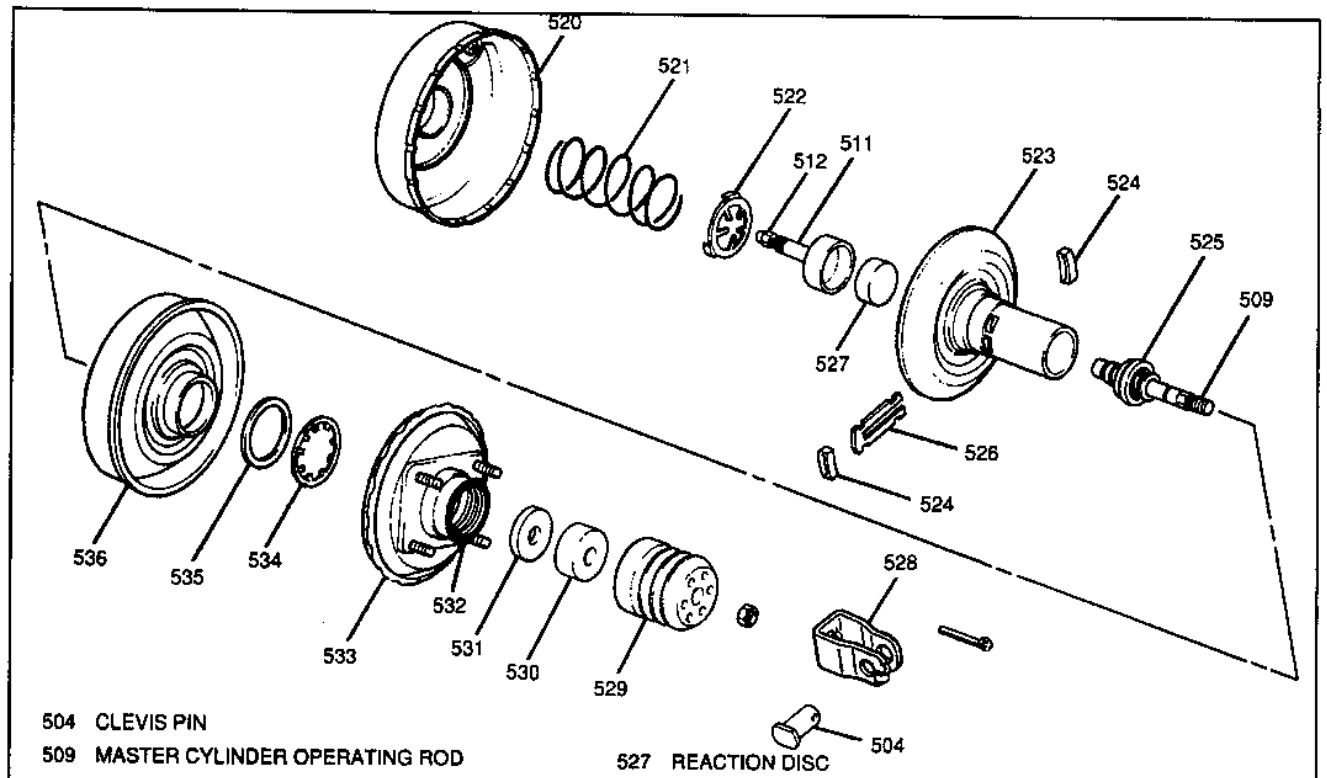

504 CLEVIS PIN
509 MASTER CYLINDER OPERATING ROD
511 BRAKE BOOSTER PISTON ROD
512 BRAKE BOOSTER PISTON ROD ADJUSTING NUT
520 BRAKE BOOSTER FRONT BODY
521 BRAKE BOOSTER PISTON RETURN SPRING
522 BRAKE BOOSTER PISTON ROD RETAINER
523 BRAKE BOOSTER PISTON
524 VALVE STOPPER KEY CUSHION
525 BRAKE BOOSTER AIR VALVE
526 VALVE STOPPER KEY
527 REACTION DISC
528 MASTER CYLINDER OPERATING ROD CLEVIS
529 REAR BODY BOOT
530 FILTER ELEMENT
531 FILTER SEPARATOR
532 BRAKE BOOSTER REAR BODY OIL SEAL
533 BRAKE BOOSTER REAR BODY
534 DIAPHRAGM STOPPER RING
535 DIAPHRAGM RETAINER
536 DIAPHRAGM

EJS0075D1

Figure 7—Brake Booster Assembly

Clean

- All metal parts in ethyl alcohol. Soak metal parts in ethyl alcohol if necessary.
- Wipe rubber diaphragm and plastic parts with a clean cloth. Do not apply alcohol to rubber parts.

Install or Connect

Tools Required:
J 34874 Booster Seal Remover/Installer
J 23456 Power Brake Booster Disassembly and Reassembly Fixture
J 23456-51A Fixture Adapter
J 7079-2 Non-Threaded Universal Driver Handle
J 35379 Front Knuckle Support

1. Apply a liberal coat of Lubriplate® lubricant, GM P/N 1052349, or equivalent, to brake booster rear body oil seal, entire surface of the reaction disc, the outside of the air valve seal, and entire surface of the diaphragm prior to installation.
2. Reaction disc to brake booster piston rod.
3. Brake booster piston rod to brake booster piston.
4. Brake booster piston rod retainer.
5. Diaphragm to brake booster piston by hand. Coat entire surface of diaphragm with Lubriplate® lubricant, GM P/N 1052349, or equivalent.

Important

- Make sure that the diaphragm is seated in the piston groove. The diaphragm should rotate smoothly around booster piston if properly seated.

6. Diaphragm stopper ring and retainer to brake booster piston (Figure 17).
7. Lubricate brake booster air valve with Lubriplate® lubricant, GM P/N 1052349, or equivalent, before installation into brake booster piston (Figure 18).
8. Brake booster air valve to brake booster piston.
9. Compress brake booster air valve and insert valve stopper key.
10. Valve stopper key cushions to stopper key.

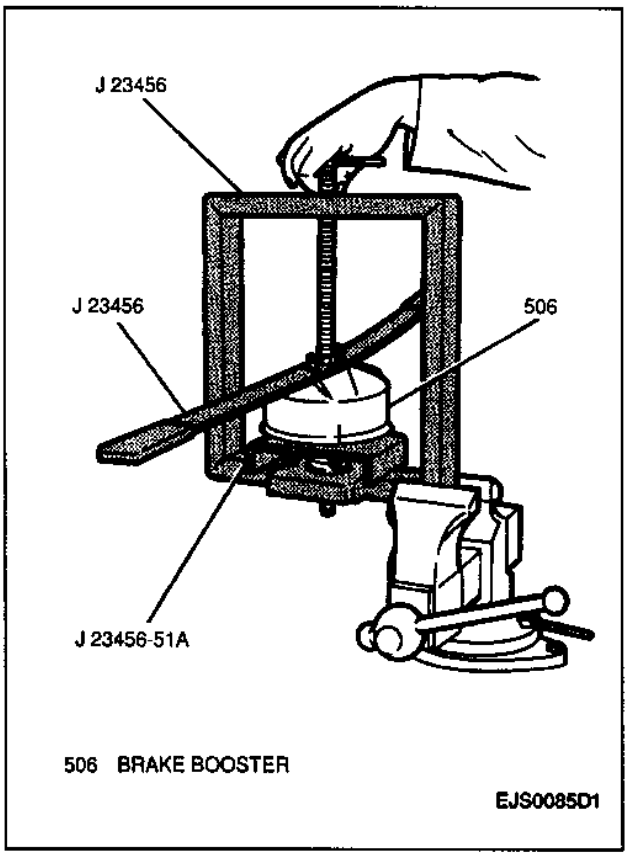

Figure 8—Installing Brake Booster into J 23456 and J 23456—51A

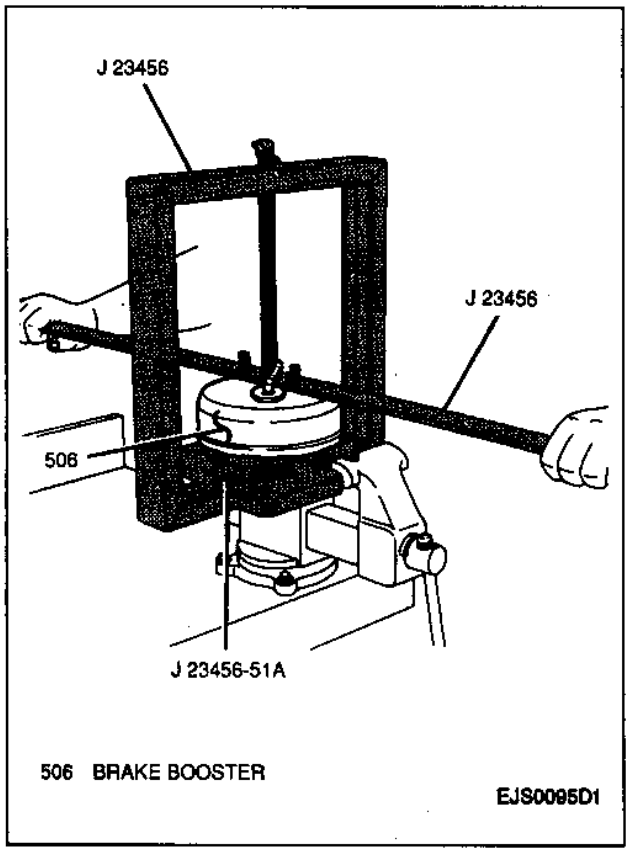

Figure 9—Rotating Brake Booster Front and Rear Bodies for Separation

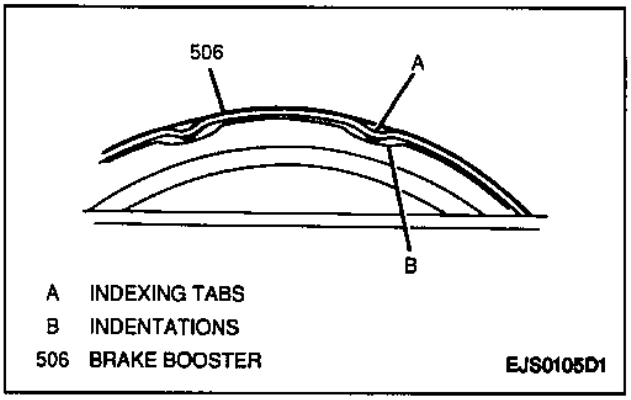

Figure 10—Aligning Indentations with Indexing Tabs

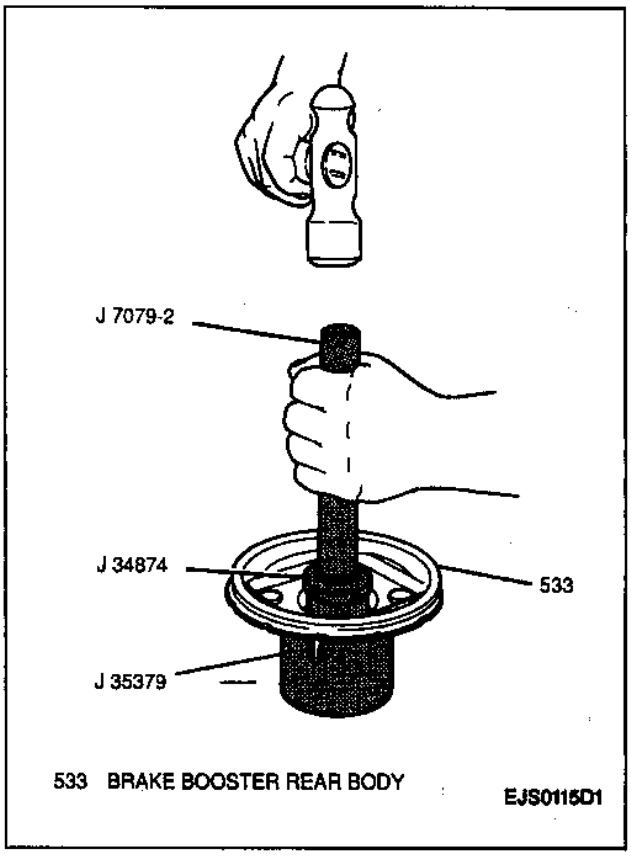

Figure 11—Removing Rear Body Oil Seal

11. A new brake booster rear body oil seal to rear body using a J 34874, a J 7079-2 and a J 35379. Drive oil seal into rear body with a hammer (Figure 19).
12. Brake booster piston to brake booster rear body.
13. Filter element and filter separator to rear body.
14. Rear body boot to rear body. Boot must be seated securely on rear booster body and air valve.
15. Brake booster piston return spring to brake booster front body.
16. Brake booster rear body to the J 23456, along with a J 23456-51A.
17. Brake booster front body to rear body, aligning piston return spring (Figure 20).
    A. Tighten the center screw of the J 23456, bringing the two booster halves together.

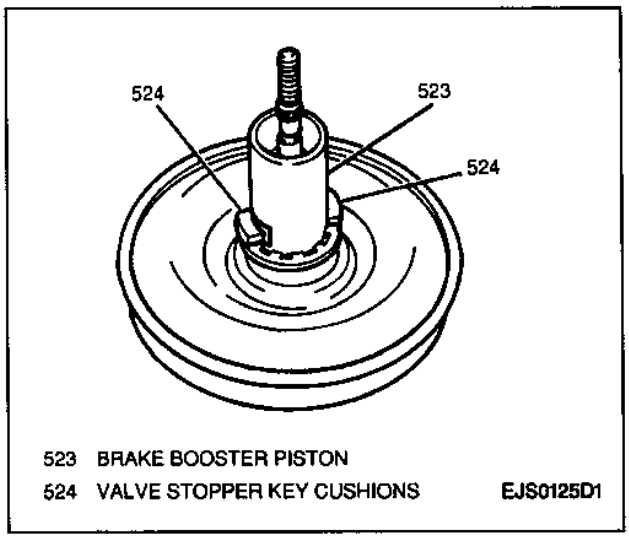

Figure 12—Valve Stopper Key Cushions

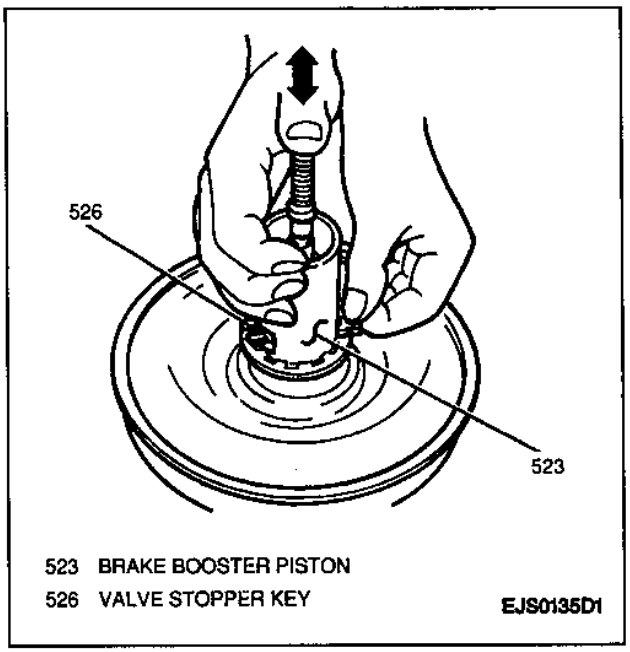

Figure 13—Removing Valve Stopper Key

B. Make sure that the booster halves have mated squarely, so that front half indexing tabs line up with the rear half indentations.
C. Rotate the front half of the booster using the bar of the J 23456, until the indexing tabs catch under the lip of the rear body. Align matchmarks made prior to booster bodies.
D. Remove the booster assembly from the J 23456 and J 23456-51A.

18. Master cylinder operating rod clevis locknut to operating rod.
19. Master cylinder operating rod clevis to master cylinder operating rod by rotating clockwise onto rod. The distance between the brake booster bracket gasket and the center of the master cylinder operating rod clevis hole must be less

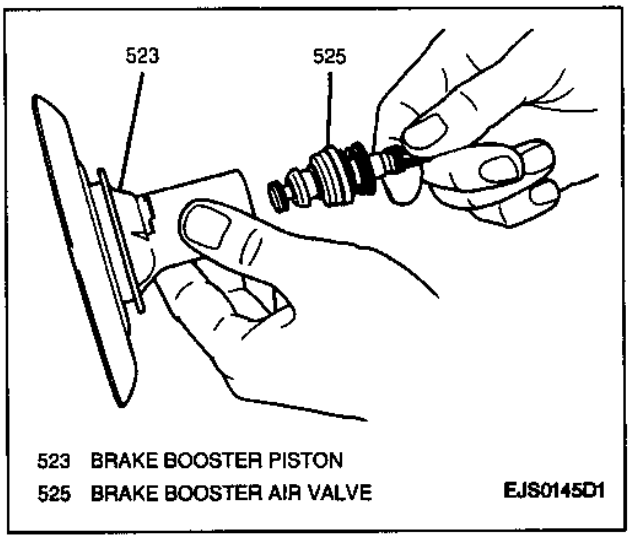

Figure 14—Removing Brake Booster Air Valve From Brake Booster Piston

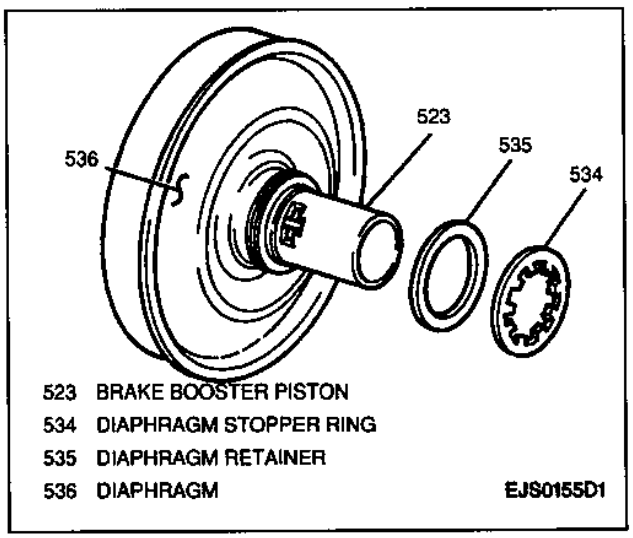

Figure 15—Diaphragm Stopper Ring and Retainer

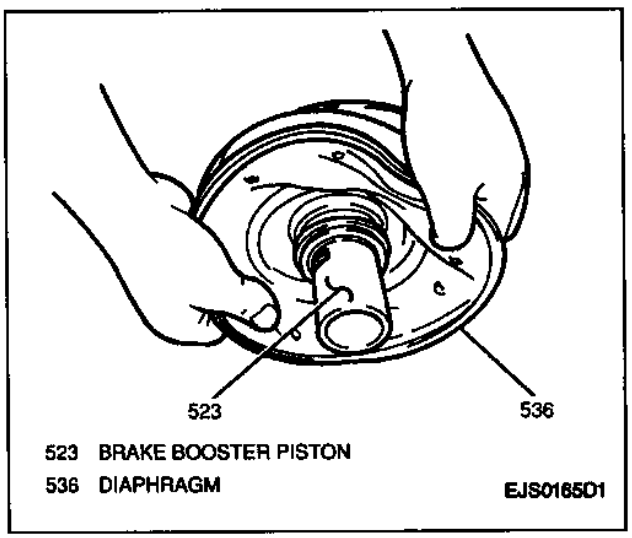

Figure 16—Removing Diaphragm From Brake Booster Piston

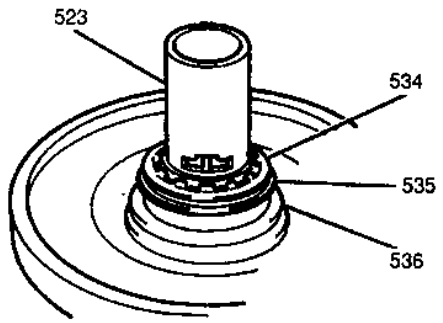

523 BRAKE BOOSTER PISTON
534 DIAPHRAGM STOPPER RING
535 DIAPHRAGM RETAINER
536 DIAPHRAGM
EJS0175D1

Figure 17—Proper Diaphragm Retainer and Stopper Ring Installation

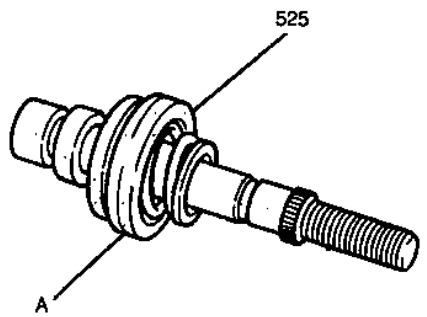

A APPLY SILICONE GREASE HERE
525 BRAKE BOOSTER AIR VALVE
EJS0185D1

Figure 18—Applying Silicone Grease to Brake Booster Air Valve

than 125.5 mm (4.94 in.) (Figure 21). Rotate clevis either clockwise or counterclockwise until the desired distance is obtained. Secure clevis in place with locknut.

Tighten

- Master cylinder operating rod clevis locknut to 25 N·m (18 lbs. ft.).

Adjust

- Brake booster piston rod. Refer to "Brake Booster Adjustment" earlier in this section.

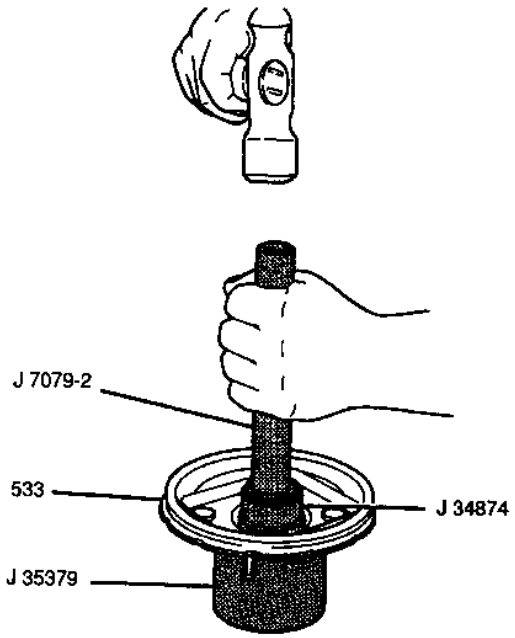

533 BRAKE BOOSTER REAR BODY
EJS0195D1

Figure 19—Installing Brake Booster Rear Body Oil Seal

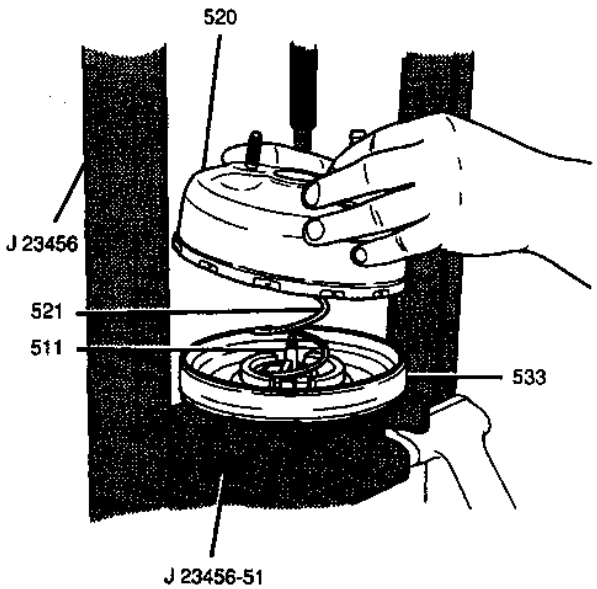

511 BRAKE BOOSTER PISTON ROD
520 BRAKE BOOSTER FRONT BODY
521 BRAKE BOOSTER PISTON RETURN SPRING
533 BRAKE BOOSTER REAR BODY
EJS0205D1

Figure 20—Installing Brake Booster Front Body to Rear Body

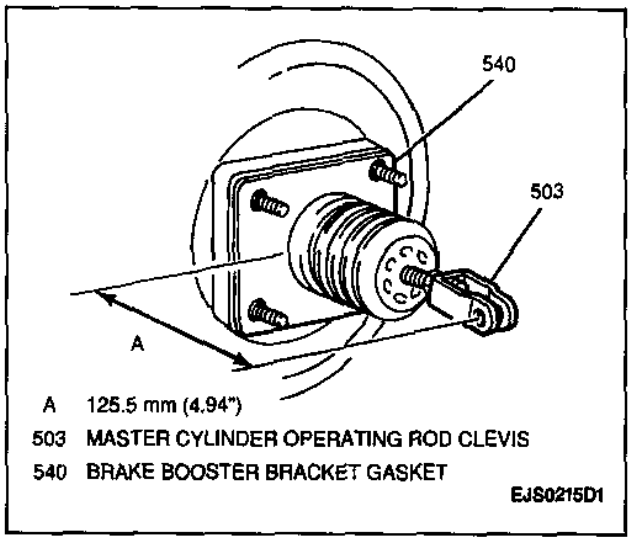

Figure 21—Master Cylinder Operating Rod Clevis-to-Brake Booster Bracket Gasket Clearance

SPECIFICATIONS

FASTENER TORQUES

Brake Booster Mounting Nuts ..... 13 N·m (115 lbs. in.)
Master Cylinder Operating Rod Clevis Locknut ..... 25 N·m (18 lbs. ft.)
Negative (-) Battery Cable-to-Negative (-) Battery Terminal Retainer ..... 15 N·m (11 lbs. ft.)

SPECIAL TOOLS

1
J 23456

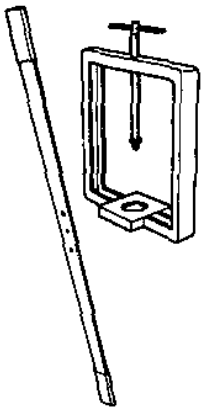

2
J 23456-51A

3
J 37767

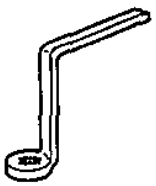

4
J 39567

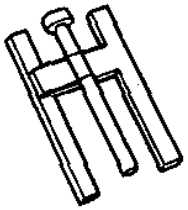

5
J 35379

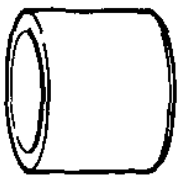

6
J 7079-2

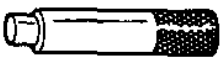

7
J 34874

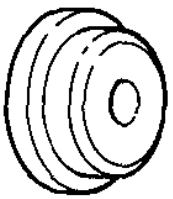

1 POWER BRAKE BOOSTER DISASSEMBLY AND REASSEMBLY FIXTURE
2 FIXTURE ADAPTER
3 BOOSTER PUSH ROD WRENCH
4 BOOSTER PISTON ROD GAGE
5 FRONT KNUCKLE SUPPORT
6 NON-THREADED UNIVERSAL DRIVER HANDLE
7 BOOSTER SEAL REMOVER & INSTALLER

EJS0225D1