## ANTILOCK BRAKE

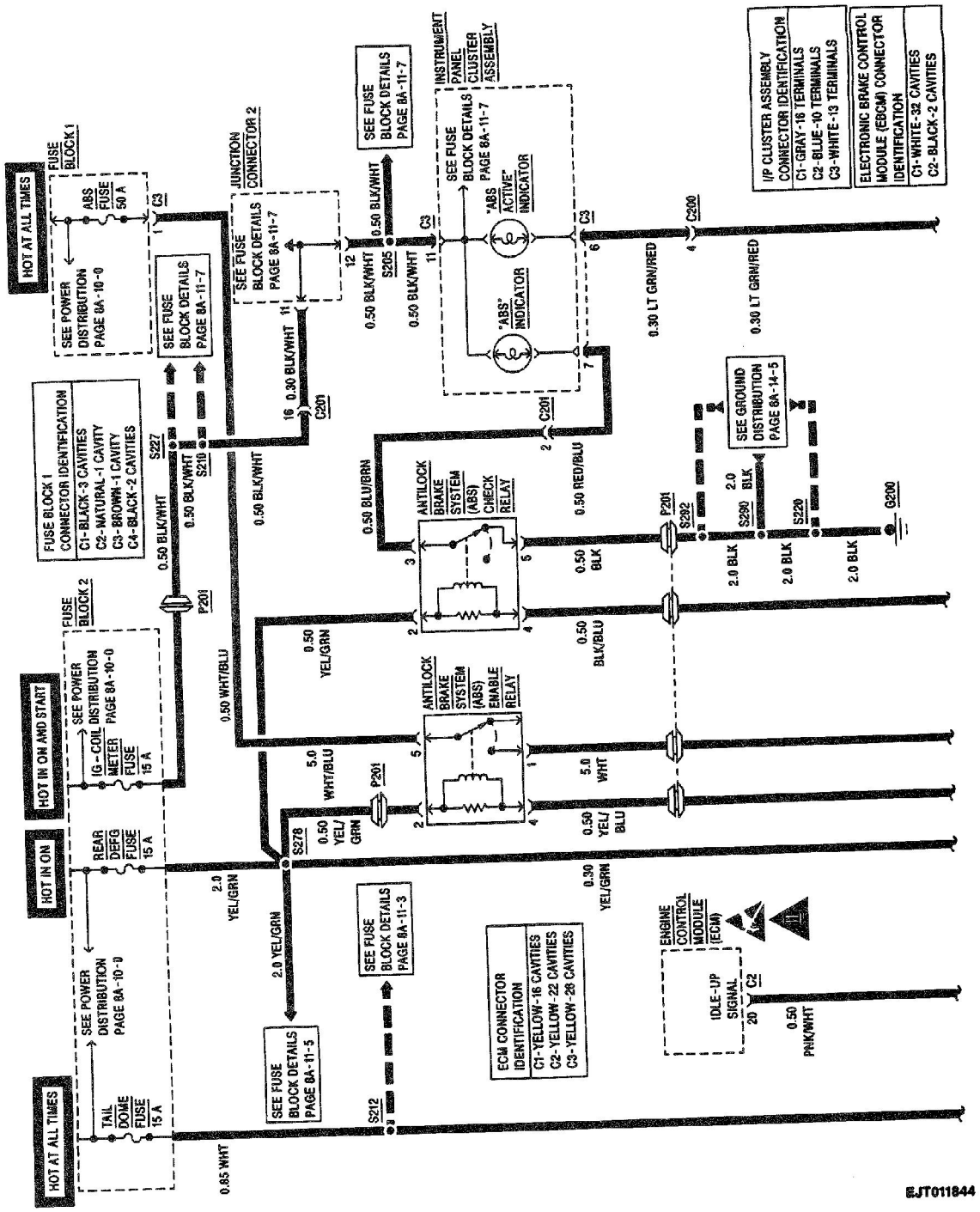

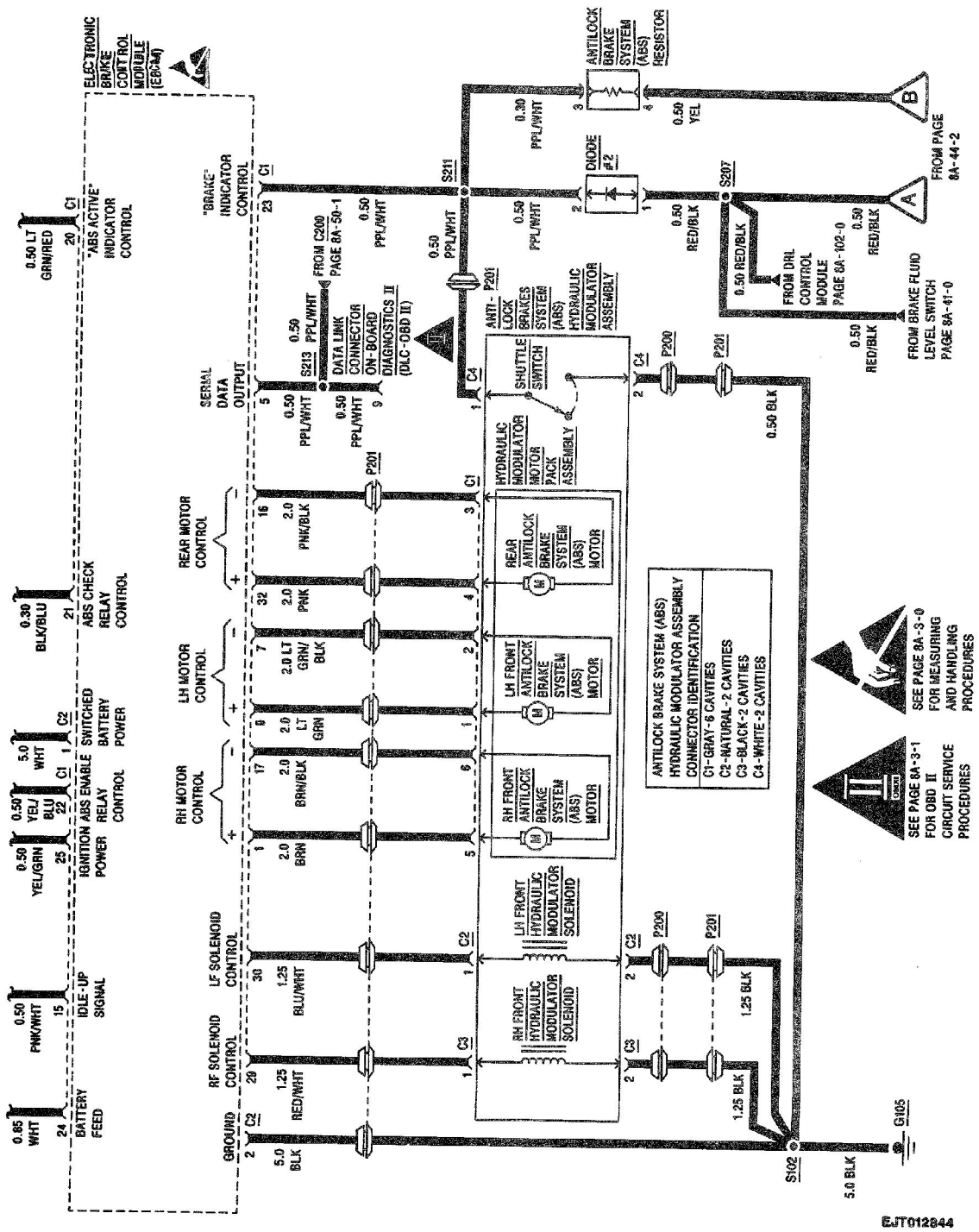
ELECTRONIC BRAKE CONTROL MODULE (EBCM)
0.85 WHT
BATTERY FEED
0.50 PNK/WHT
IDLE-UP SIGNAL
0.50 YEL/GRN
IGNITION
0.50 YEL/BLU
ABS ENABLE RELAY CONTROL
5.0 WHT
SWITCHED BATTERY POWER
0.30 BLK/BLU
ABS CHECK RELAY CONTROL
0.50 LT GRN/RED
"ABS ACTIVE" INDICATOR CONTROL
GROUND
RF SOLENOID CONTROL
LF SOLENOID CONTROL
RH MOTOR CONTROL
LH MOTOR CONTROL
REAR MOTOR CONTROL
SERIAL DATA OUTPUT
"BRAKE" INDICATOR CONTROL
5.0 BLK
1.25 RED/WHT
1.25 BLU/WHT
2.0 BRN
2.0 BRN/BLK
2.0 LT GRN
2.0 LT GRN/BLK
2.0 PNK
2.0 PNK/BLK
0.50 PPL/WHT
FROM C200 PAGE 8A-50-1
DATA LINK CONNECTOR ON-BOARD DIAGNOSTICS II (DLC-OBD II)
S213
S211
ANTI-LOCK BRAKES SYSTEM (ABS) HYDRAULIC MODULATOR ASSEMBLY
P201
SHUTTLE SWITCH
HYDRAULIC MODULATOR MOTOR PACK ASSEMBLY
REAR ANTILOCK BRAKE SYSTEM (ABS) MOTOR
LH FRONT ANTILOCK BRAKE SYSTEM (ABS) MOTOR
RH FRONT ANTILOCK BRAKE SYSTEM (ABS) MOTOR
LH FRONT HYDRAULIC MODULATOR SOLENOID
RH FRONT HYDRAULIC MODULATOR SOLENOID
ANTILOCK BRAKE SYSTEM (ABS) HYDRAULIC MODULATOR ASSEMBLY CONNECTOR IDENTIFICATION
C1-GRAY-6 CAVITIES
C2-NATURAL-2 CAVITIES
C3-BLACK-2 CAVITIES
C4-WHITE-2 CAVITIES
P200
1.25 BLK
0.50 BLK
S102
G105
0.30 PPL/WHT
DIODE #2
S207
0.50 RED/BLK
FROM DRL CONTROL MODULE PAGE 8A-102-0
FROM BRAKE FLUID LEVEL SWITCH PAGE 8A-41-0
ANTILOCK BRAKE SYSTEM (ABS) RESISTOR
0.50 YEL
FROM PAGE 8A-44-2
SEE PAGE 8A-3-1 FOR OBD II CIRCUIT SERVICE PROCEDURES
SEE PAGE 8A-3-0 FOR MEASURING AND HANDLING PROCEDURES
EJT012844

# ANTILOCK BRAKE

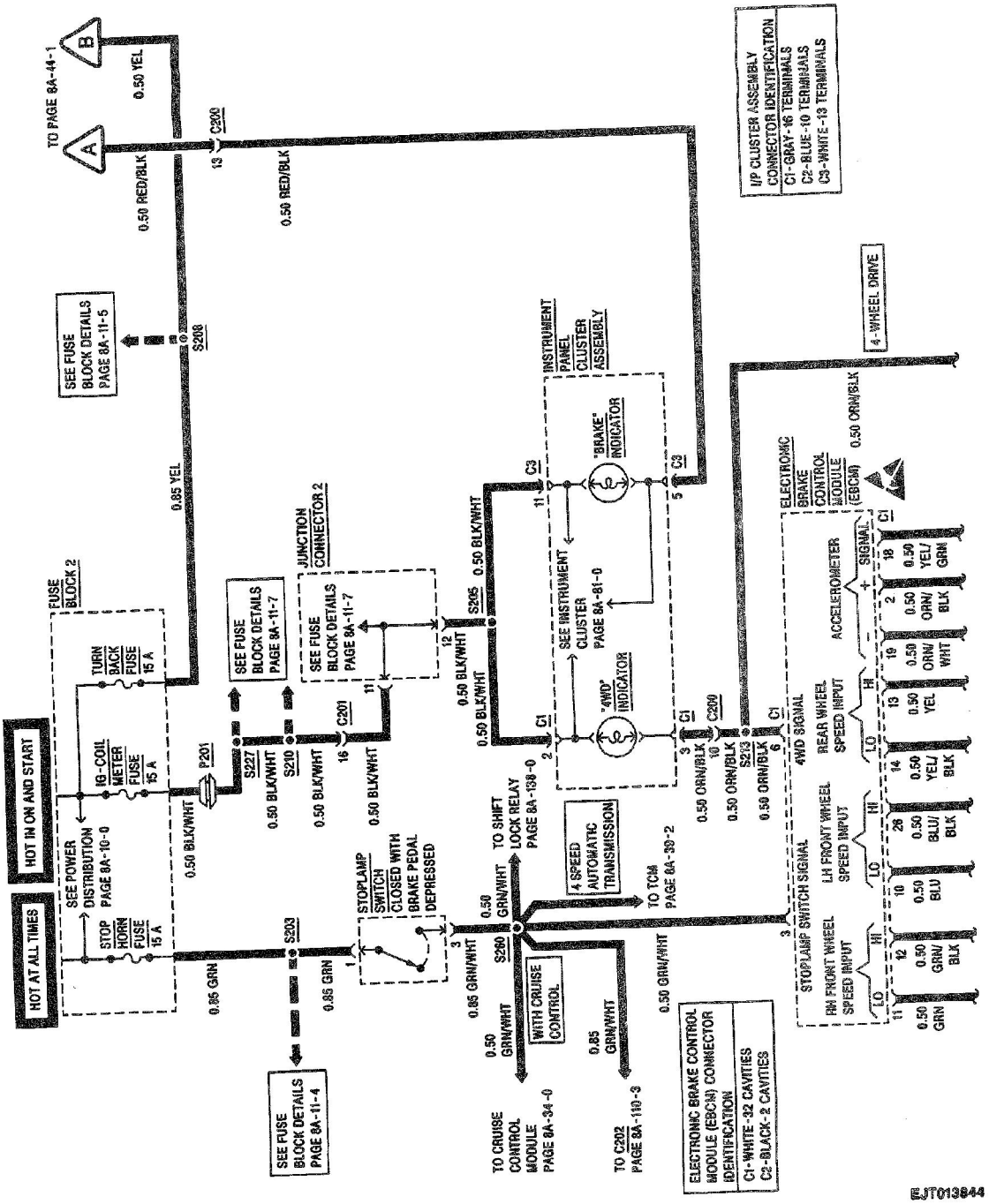

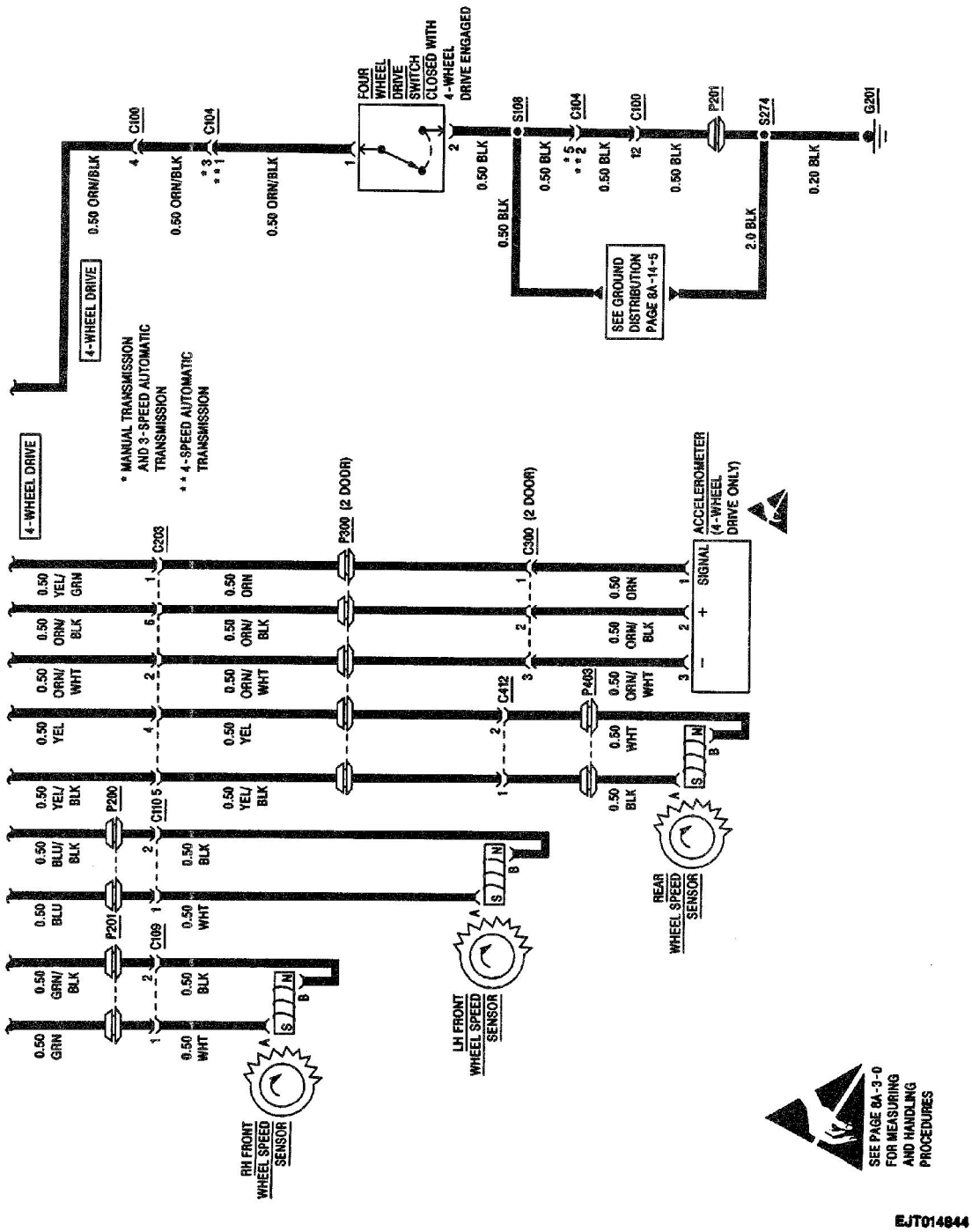
4-WHEEL DRIVE
4-WHEEL DRIVE
* MANUAL TRANSMISSION AND 3-SPEED AUTOMATIC TRANSMISSION
** 4-SPEED AUTOMATIC TRANSMISSION
FOUR WHEEL DRIVE SWITCH CLOSED WITH 4-WHEEL DRIVE ENGAGED
SEE GROUND DISTRIBUTION PAGE 8A-14-5
ACCELEROMETER (4-WHEEL DRIVE ONLY)
SIGNAL
P300 (2 DOOR)
C300 (2 DOOR)
RH FRONT WHEEL SPEED SENSOR
LH FRONT WHEEL SPEED SENSOR
REAR WHEEL SPEED SENSOR
SEE PAGE 8A-3-0 FOR MEASURING AND HANDLING PROCEDURES
EJT014844

# ANTILOCK BRAKE

ELECTRONIC BRAKE CONTROL MODULE (EBCM) CONNECTOR – C1:
12045470

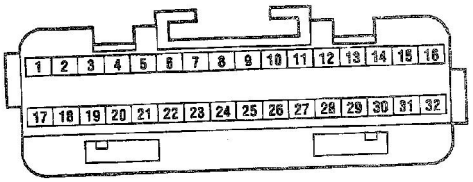


WHITE

SBS006844

## WIRING DETAIL LEGEND

| CAVITY | WIRE COLOR | CIRCUIT |
|---|---|---|
| 1 | BRN | RH Motor Control (+) |
| 2 | ORN/BLK | Accelerometer (+) (4WD) |
| 3 | GRN/WHT | Stoplamp Switch Signal |
| 4 | — | NOT USED |
| 5 | PPL/WHT | Serial Data Output |
| 6 | ORN/BLK | 4WD Signal (4WD) |
| 7 | LT GRN/BLK | LH Motor Control (-) |
| 8 | — | NOT USED |
| 9 | LT GRN | LH Motor Control (+) |
| 10 | BLU | LH Front Wheel Speed Input (LO) |
| 11 | GRN | RH Front Wheel Speed Input (LO) |
| 12 | GRN/BLK | RH Front Wheel Speed Input (HI) |
| 13 | YEL | Rear Wheel Speed Input (HI) |
| 14 | YEL/BLK | Rear Wheel Speed Input (LO) |
| 15 | PNK/WHT | Idle-Up Signal |
| 16 | PNK/BLK | Rear Motor Control (-) |

| CAVITY | WIRE COLOR | CIRCUIT |
|---|---|---|
| 17 | BRN/BLK | RH Motor Control (-) |
| 18 | YEL/GRN | Accelerometer Signal (4WD) |
| 19 | ORN/WHT | Accelerometer (-) (4WD) |
| 20 | LT GRN/RED | ABS "ACTIVE" Indicator Control |
| 21 | BLK/BLU | ABS Check Relay Control |
| 22 | YEL/BLU | ABS Enable Relay Control |
| 23 | PPL/WHT | "BRAKE" Indicator Control |
| 24 | WHT | Battery Feed |
| 25 | YEL/GRN | Ignition Power |
| 26 | BLU/BLK | LH Front Wheel Speed Input (HI) |
| 27 | — | NOT USED |
| 28 | — | NOT USED |
| 29 | RED/WHT | RF Solenoid Control |
| 30 | BLU/WHT | LF Solenoid Control |
| 31 | — | NOT USED |
| 32 | PNK | Rear Motor Control (+) |

A1: ELECTRONIC BRAKE CONTROL MODULE (EBCM) CONNECTOR – C2
1206 4749

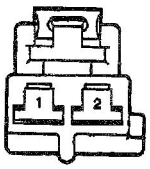


METRIPACK 480
BLACK

SBS007844

## WIRING DETAIL LEGEND

| CAVITY | WIRE COLOR | CIRCUIT |
|---|---|---|
| 1 | WHT | Switched Battery Power |
| 2 | BLK | Ground - G105 |

## ANTILOCK BRAKE

| COMPONENT | LOCATION | 201-PG | FIG. | CONN |
|---|---|---|---|---|
| Accelerometer (With 4 Wheel Drive) | Under Center Console | | | |
| Antilock Brake System (ABS) Check Relay | LH Engine Compartment, mounted to Left Inner Fender in front of ABS Hydraulic Modulator Assembly | | | |
| Antilock Brake System (ABS) Enable Relay | LH Engine Compartment, mounted to Left Inner Fender in front of ABS Hydraulic Modulator Assembly | | | |
| Antilock Brake System (ABS) Hydraulic Modulator Assembly | LH Rear Engine Compartment | | | |
| C1 (6 Cavities) | Main Harness to Hydraulic Modulator Assembly Pigtail, LH Rear Engine Compartment | 00 | A | |
| C2 (2 Cavities) | Main Harness to LH Front Hydraulic Modulator Solenoid, LH Rear Engine Compartment | 00 | A | |
| C3 (2 Cavities) | Main Harness to RH Front Hydraulic Modulator Solenoid, LH Rear Engine Compartment | 00 | A | |
| C4 (2 Cavities) | Main Harness to Shuttle Switch, LH Rear Engine Compartment | 00 | A | |
| Antilock Brake System (ABS) Resistor | RH I/P, behind I/P Compartment taped to Main Harness | | | |
| Data Link Connector On-Board Diagnostics II (DLC-OBDII) | LH I/P, left of Center Console on Knee Bolster | | | 50-02 |
| Electronic Brake Control Module (EBCM) (with ABS) | Under LH I/P, right of Steering Column | | | |
| C1 (32 Cavities) | Main Harness to EBCM, behind I/P right of Steering Column | 06 | A | 44-04 |
| C2 (2 Cavities) | Main Harness to EBCM, behind I/P right of Steering Column | 06 | A | 44-05 |
| Engine Control Module (ECM) | Under LH I/P, left of Steering Column | | | |
| C2 (22 Cavities) | Main Harness to ECM, behind I/P left of Steering Column | 06 | A | 20-11 |
| Four Wheel Drive Switch | Top of Transfer Case | | | |
| Fuse Block 1 | RH Engine Compartment, front of Battery | 01 | A | |
| C3 (1 Cavity) | Main Harness to Fuse Block 1, below Fuse Block 1 | 01 | A | |
| Fuse Block 2 | Under LH I/P | 06 | A | |
| Instrument Panel Cluster Assembly | LH I/P | 07 | A | |
| C1 (16 Terminals) | I/P Harness to I/P Cluster Assembly, behind I/P Cluster Assembly | 07 | A | 81-03 |
| C3 (13 Terminals) | I/P Harness to I/P Cluster Assembly, behind I/P Cluster Assembly | 07 | A | 81-05 |

| COMPONENT | LOCATION | 201-PG | FIG. | CONN |
|---|---|---|---|---|
| Junction Connector 2 (20 Cavities) | I/P Harness, LH side of I/P, behind Illumination Controller | | | |
| LH Front Wheel Speed Sensor (with ABS) | LH Front Wheel, on Steering Knuckle | 16 | B | |
| Rear Wheel Speed Sensor (with ABS) | In Rear Differential Carrier | | | |
| RH Front Wheel Speed Sensor (with ABS) | RH Front Wheel, mounted on Steering Knuckle | 16 | C | |
| Stoplamp Switch | Under LH I/P, above Brake Pedal | 06 | A | |
| C100 (16 Cavities) | Main Harness to Engine Harness, on Bulkhead mounted to Bracket, left of Front Wiper Motor | 04 | A | 202-01A1 |
| C104 (6 Cavities) (Manual and 3-Speed Automatic Transmission) | Engine Harness to Transmission Harness, RH Rear of Engine Compartment, under Intake Manifold | 05 | A | 202-15B2 |
| C104 (9 Cavities) (4-Speed Automatic Transmission) | Engine Harness to Transmission Harness, RH Rear of Engine Compartment, under Intake Manifold | 05 | A | 202-03A1 |
| C109 (2 Cavities) | Main Harness to RH Front Wheel Speed Sensor Jumper Harness, behind RH Headlamp | | | |
| C110 (2 Cavities) | Main Harness to LH Front Wheel Speed Sensor Jumper Harness, behind LH Headlamp | | | |
| C200 (22 Cavities) | Main Harness to I/P Harness, LH I/P near Fuse Block 2 | 06 | A | 202-06A1 |
| C201 (16 Cavities) | Main Harness to I/P Harness, LH I/P near Fuse Block 2 | 06 | A | 202-07A1 |
| C203 (6 Cavities) | Main Harness to Floor Harness, LH I/P near G200 | 06 | A | 202-15B2 |
| C300 (2 Cavities) (2-Door) | Floor Harness to Dome Lamp Harness, behind LH Rear Passenger Compartment Trim Panel | 08 | A | |
| C412 (3 Cavities) | Floor Harness to Rear Wheel Speed Sensor Jumper Harness, behind LH Wheelhousing | | | |
| G105 (with ABS) | RH Inner Fender, near Battery | 01 | A | |
| G200 | Behind LH I/P, above Fuse Block 2 | 06 | A | |
| G201 | Behind RH I/P, near Blower Assembly | 06 | A | |
| P200 | LH Engine Compartment on Bulkhead, near Brake Master Cylinder | 04 | A | |
| P201 | RH Rear Engine Compartment on Bulkhead, near Battery | 01 | A | |
| P300 (2-Door) | LH "A" Pillar, under I/P, behind LH Kick Panel | 08 | A | |
| P403 | LH rear of vehicle, left of LH Frame Rail | 10 | A | |
| S102 | Main Harness, near P201 | | | |
| S108 (4-Speed Automatic) | Transmission Harness, near 4WD Switch breakout | | | |
| S203 | Main Harness, behind I/P left of Steering Column | | | |
| S205 | I/P Harness, behind center of I/P | | | |

## ANTILOCK BRAKE

| COMPONENT | LOCATION | 201-PG | FIG. | CONN |
|---|---|---|---|---|
| S207 | Main Harness, LH rear of Engine Compartment | | | |
| S208 | Main Harness, near Fuse Block 2 | | | |
| S210 | Main Harness, at Bulkhead near Front Wiper Motor | | | |
| S211 | I/P Harness, near I/P near LH Front Speaker | | | |
| S212 | Main Harness, left of Steering Column | | | |
| S213 | Main Harness, near Electronic Brake Control Module (EBCM) connector breakout | | | |
| S220 | Main Harness, near I/P left of Steering Column | | | |
| S227 | Main Harness, near Fuse Block 2 | | | |
| S260 | Main Harness, near Blower Speed Selector Switch | | | |
| S274 | Main Harness, near Engine Control Module (ECM) | | | |
| S278 | Main Harness, near Fuse Block 2 | | | |
| S290 | Main Harness, left of Steering Column | | | |
| S292 | Main Harness, near P200 | | | |

## SYSTEM DIAGNOSIS

For system diagnosis, diagnostic trouble codes (DTC's) and service information regarding the Antilock Brake System (ABS), refer to SECTION 5E1.

BLANK